NEXTIVITY
Smarter by Design

CEL-FI QUATRA 100M
Installation and User Guide

MODEL NUMBERS:
EMEA/APAC: Q51-FXNU, Q51-FXCU, & Q50-XEPU
AMER: Q51-RXNU, Q51-RXCU, Q51-SXNU, Q51-SXCU, Q51-NXNU, Q51-NXCU, Q50-XEPU

Rev Date: 5/31/2026

Table of Contents

1 | Introduction 1
1.1 What is the CEL-FI QUATRA 100M? 1
1.2 CEL-FI QUATRA 100M Key Features 2
1.3 About This Guide 3
1.4 Safety Precautions 3
2 | Training & Support Resources 4
3 | System Overview 5
3.1 Hardware Components Overview 5
4 | Software & Management Tools 14
4.1 Nextivity WAVE Portal 14
4.2 Nextivity Tools 15
4.3 Online Planning Tools (iBwave Templates, Partner Portal Resources) 15
5 | Installation Process (Project Step-by-Step) 16
5.1 Step 1 – Survey & Measure 16
5.2 Step 2 – Plan the System 16
5.3 Step 3 – Install the Hardware and Antennas 20
5.4 Step 4 – Install Cables 25
5.5 Step 5 – Power ON & Commission the System 30
5.6 Step 6 – Evaluate the Installation 40
Appendix A | WAVE Portal (NMS) Firewall Settings 42
Appendix B | Smart Antennas and Modules 43
Appendix C | Ethernet-connected IoT Devices 44
Appendix D | Nextivity Tools 45
Quick Reference – Available Tools 45
Detailed Tool Descriptions 45
More Information 46
Appendix E | Fiber Optic Cables 47
Using Pre-made Cables and Existing Dark Fiber 47
Field Terminating and Splicing Fiber Optic Cables 47
Testing & Verification with an Optical Power Meter or OTDR to check signal loss. 49
Appendix F | LED Indications 50
PU LEDs 50

NU LEDs 50
CU LEDs 52
Appendix G | WAVE Portal 54
Troubleshooting (WAVE Portal Alarm Notifications) 54
WAVE Portal Guidance Alerts 56
Appendix H | Useful Toolbox Items for Installs 57
Specifications and Dimensions 58
Trademarks 58
Warranty & Limitation of Liability 58
Regulatory 58

1 | Introduction

1.1 What is the CEL-FI QUATRA 100M?

The CEL-FI QUATRA 100M is a high-performance cellular coverage solution designed for **single-operator network coverage expansion** into buildings, supporting **4G** and **5G.** Systems outside the USA also support **Private Networking deployments**. Multiple systems can be deployed to cover a larger area or overlayed to support multiple operators.

Please note that some bands may require carrier Retransmission Agreements (RTA) depending on the country where installed. Knowledge and adherence of these requirements is the responsibility of the installer.

CEL-FI QUATRA 100M implements lossless fiber-based digital signal distribution and Nextivity's renowned cellular network safety features for off-air-fed deployments. The system is **compatible** with the **SMART SERVER ANTENNA & MODULE**, enabling passive DAS monitoring.

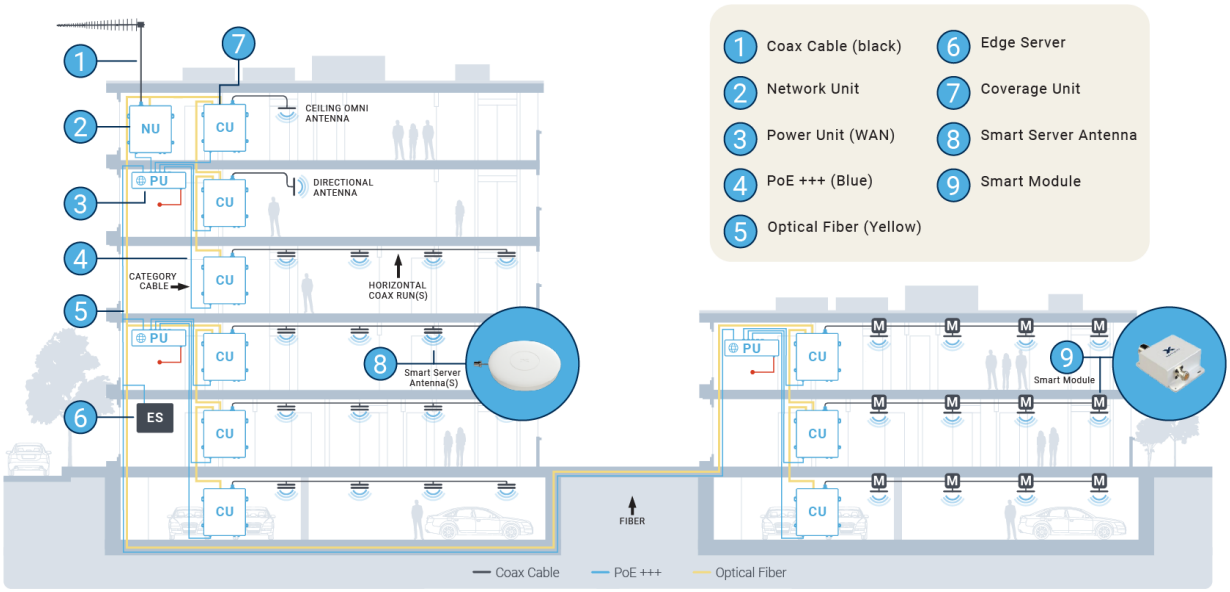

Figure 1: Example QUATRA 100M system layout showing Network Units (NUs), Coverage Units (CUs), Power Units (PUs), optical and coaxial cabling, and integration with Smart Server Antennas and Smart Modules for IoT support.

QUATRA 100M offers a host of features for IoT support:

- **Wireless IoT devices** via the SMART SERVER ANTENNA & MODULE.
- **Wired PoE IoT devices** via Network, Coverage and Power Units.

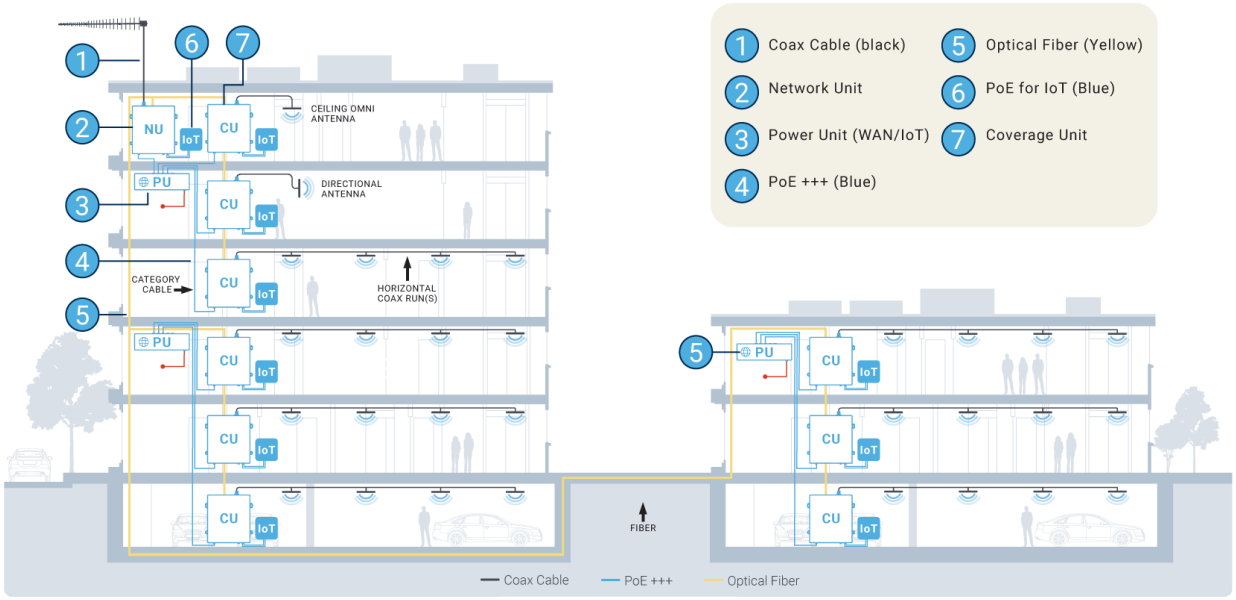

Figure 2: QUATRA 100M system layout illustrating NUs, CUs, PUs, optical and coaxial cabling, and PoE IoT device integration throughout the building.

1.2 CEL-FI QUATRA 100M Key Features

- **FCC/ISED/CE/EU RED Compliant** – Meets US, Canada and European regulatory standards for safety and performance.
- **5G TDD 100 MHz Support** – Seamlessly integrates with operator networks, delivering maximum throughput with real-time echo cancellation.
- 4G/5G FDD 20 MHz Support – ALL AMER/EMEA/APAC versions support one additional 4G or 5G channel up to 20 MHz, except the AMER RX version (5G TDD 100 MHz only).
- **Scalable Deployment** – Expand coverage easily by daisy-chaining multiple Coverage Units (CUs).
- **Lossless Signal Distribution** – Fiber-based digital transmission ensures zero signal degradation.
- **Comprehensive Hardware Suite** – Includes:
  - Network Unit (NU) for donor signal processing
  - Coverage Units (CUs) for signal distribution
  - Power Unit (PU) for high-power PoE+++ supply
- **Remote Monitoring & Configuration** – Managed via the Nextivity WAVE Portal cloud platform.
- **Carrier Approved & Network Safe** – Fully authorized for use on operator networks without restrictions.

See the Data Sheets for a more comprehensive list of specifications.

1.3 About This Guide

There are a variety of CEL-FI QUATRA product variants available, supporting a variety of band configurations, for multiple regions. This manual is applicable to CEL-FI QUATRA 100M product series only, and does not apply to any other QUATRA variant.



	EMEA/APAC	AMER	AMER	AMER
BAND SUPPORT	1/3/5/7/8/28/77/78	77	77/2/4/5/7/12/14/17/25/66	48
NETWORK UNIT	Q51-FXNU	Q51-RXNU	Q51-SXNU	Q51-NXNU
COVERAGE UNIT	Q51-FXCU	Q51-RXCU	Q51-SXCU	Q51-NXCU
POWER UNIT	Q50-XEPU			

Figure 3: Model Numbers by Region

1.4 Safety Precautions

- Use CEL-FI QUATRA 100M **indoors**. It should not be used outdoors.
- These products are **designed to use** the **external Power Unit (PU)**. When installing the equipment, you must **meet all the manufacturer's requirements** and the r**eferenced standards**.
- There are **no user-serviceable parts** inside.
- The CEL-FI QUATRA 100M is rated to operate normally in the environment of **32 to 104 °F (0 to 40 °C)**.
- The CEL-FI QUATRA 100M is rated to operate normally at an altitude of **0-2000m** indoors**.**

➲ **NOTE:** Changes or modifications to this product not expressly approved by Nextivity may void your right to operate the equipment.

2 | Training & Support Resources

Nextivity provides easy access to various training options including but not limited to:



- The online CEL-FI University:
  - Enter the university from the Nextivity Partner Portal
  - Request Access to the Partner Portal
- The Customer Experience Center (CEC) in San Diego, California for hands-on training or just to see systems in operation and learn more about Nextivity.
- The WAVE Portal remote management system also provides real-time guidance using the actual runtime data from your installed systems.



3 | System Overview

3.1 Hardware Components Overview

CEL-FI QUATRA 100M is a modular solution with three (3) main foundational components: **Network Unit (NU)**, **Coverage Unit (CU)**, and **Power Unit (PU)**.

Cellular signals are brought into the system at the NU through a donor antenna or small cell RF connection. Those signals are digitized and individually processed and sent to up to 4 CUs for retransmission, and each CU may serially connect to up to two more CUs for a maximum of 12 CUs per NU.

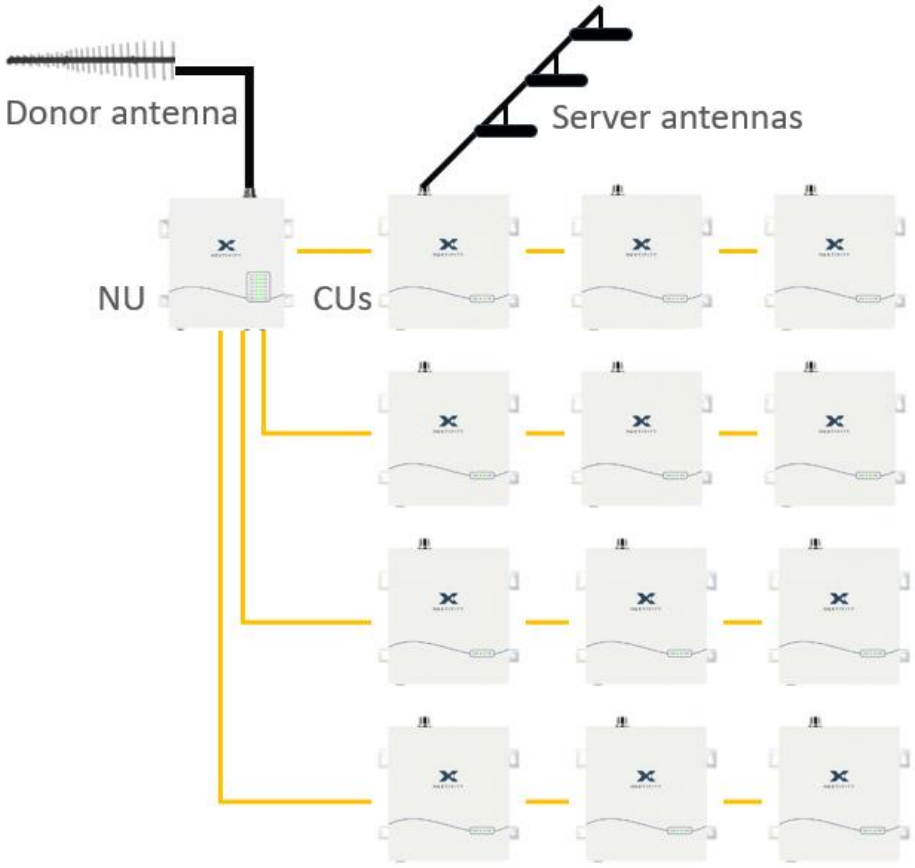

Figure 3: QUATRA 100M system: The NU receives signals from a donor antenna and distributes them to up to 12 CUs (4 direct, plus daisy-chained expansions)."

Power is provided to the entire system over Category Cable and high-power PoE+++ through the PU.

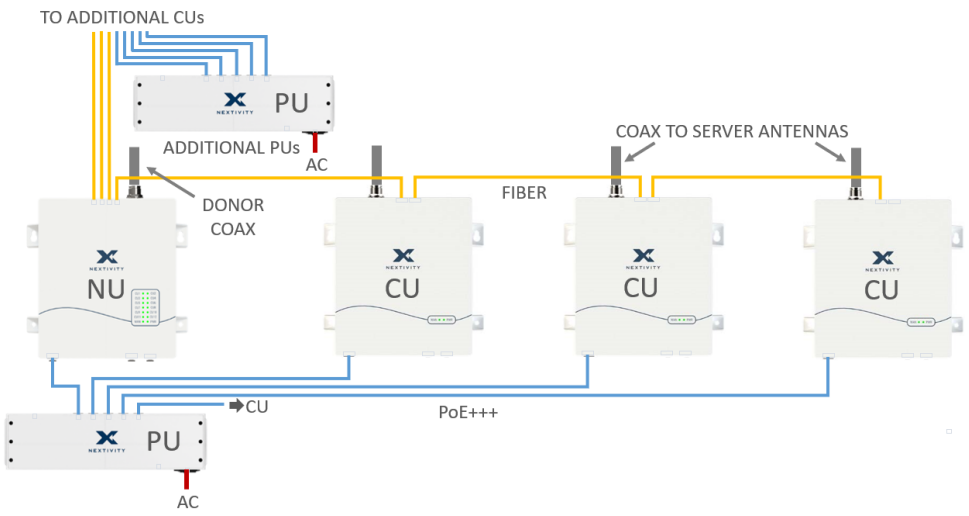

Figure 4: Power distribution: The PU delivers PoE+++ over Category cables to the NU and CUs, alongside fiber-based signal connections.

Network Unit (NU)

The NU is the head-end for the QUATRA 100M system. The RF cellular signal source is connected to the NU and digitized for distribution over optical cable to each CU.

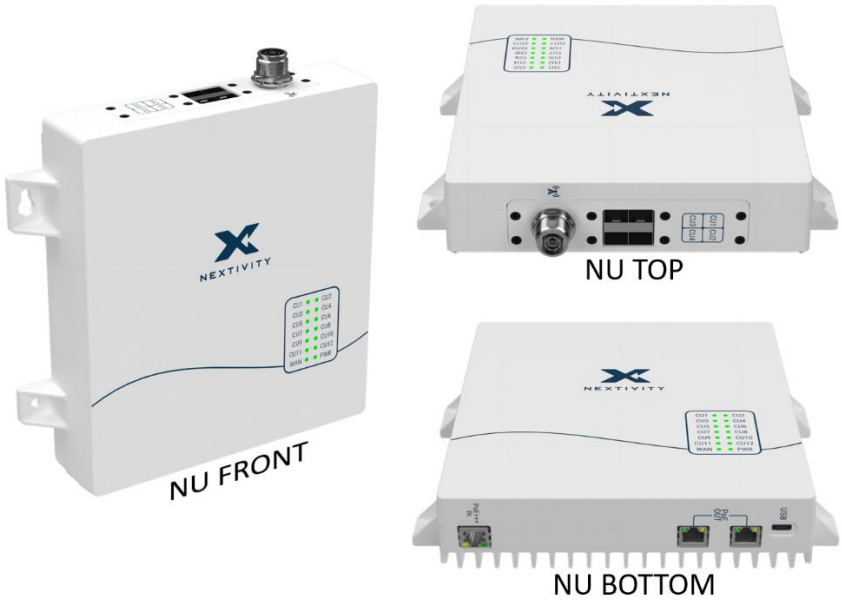

Figure 5: Network Unit (NU) front, top, and bottom views showing donor antenna port, optical CU ports, PoE+++ power/WAN port, device ports, USB-C management port, and LED status indicators.

➲ **NOTE:** Only cellular signals may be connected to the donor port. Other types of radio signals will not work and may damage the system.

Power

- PoE power is supplied to the NU from the PU

Physical Interfaces

- One 4.3-10(f) donor signal antenna port
- Four SFP+ ports (for up to four 10 Gbit/s optical CU connections)
- One RJ45 PoE+++ power input and WAN port
- Two RJ45 IoT device connection ports
- One USB-C port for local WAVE Field Tool (WFT) management

User Interfaces

- LED interface (front) to indicate system status
  - PWR - Power & status
  - WAN - connection to the site network
  - CU1 – CU12
- RJ45 Link LEDs

Coverage Unit (CU)

The CU receives the digitized cellular signals from the NU over the optical cable, converts them back to RF, and then amplifies and distributes the service from its 4.3-10(f) RF port. Service can be deployed through a single connected antenna or a DAS field.

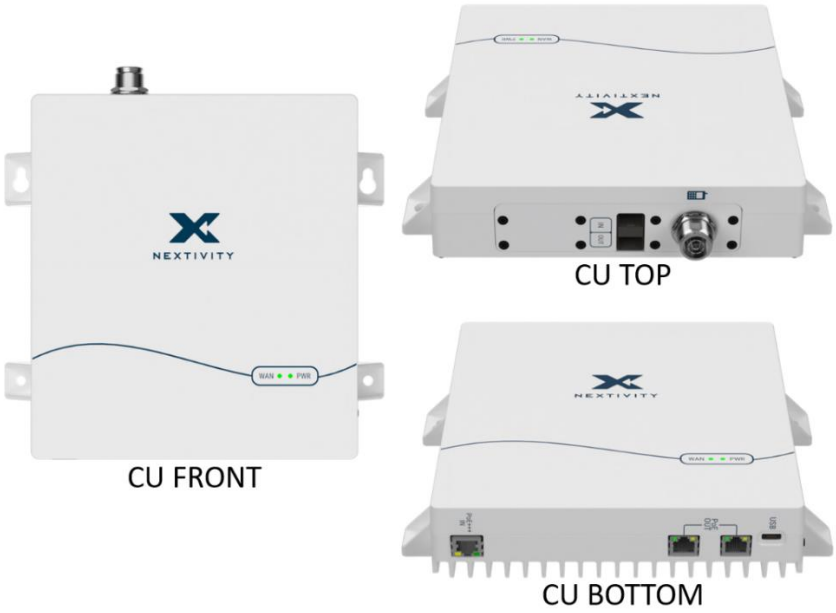

Figure 6: Network Unit (NU) front, top, and bottom views showing the donor antenna port, SFP+ optical ports, PoE+++ input, RJ45 device connections, USB-C port, and LED status indicators.

Power

- PoE power is supplied from the PU

Physical Interfaces

- One 4.3-10(f) server antenna port
- Two SFP+ ports (IN from NU or another CU and OUT to another CU for a maximum of three daisy-chained CUs)
- One RJ45 PoE+++ power input and WAN port
- Two RJ45 PoE device connection ports
- One USB-C port for local WAVE Field Tool (WFT) management

User Interfaces

- LED interface (front) to indicate system status
  - PWR - Power & status
  - WAN - connection to the site network
- RJ45 Link LEDs

Power Unit (PU)

The POWER UNIT (PU) provides power to system components using PoE+++ (90W - IEEE 802.3bt Type 4) and Cat5e Category Cable at distances of up to 100 meters or up to 150 meters for 23 AWG Cat6 cable such as Leviton LANmark Cat6 cable or equivalent. 150 meters of 23 AWG Cat6A cable may also be used if Leviton SST or equivalent cable is used. The PU can be installed next to the NU, with additional PUs elsewhere to power additional CUs. The PU connected to the NU also serves as the WAN connection point to the site network, for remote management of the WAVE Portal for the CEL-FI system and to support IoT device connections in the system (See Appendix C for more information).

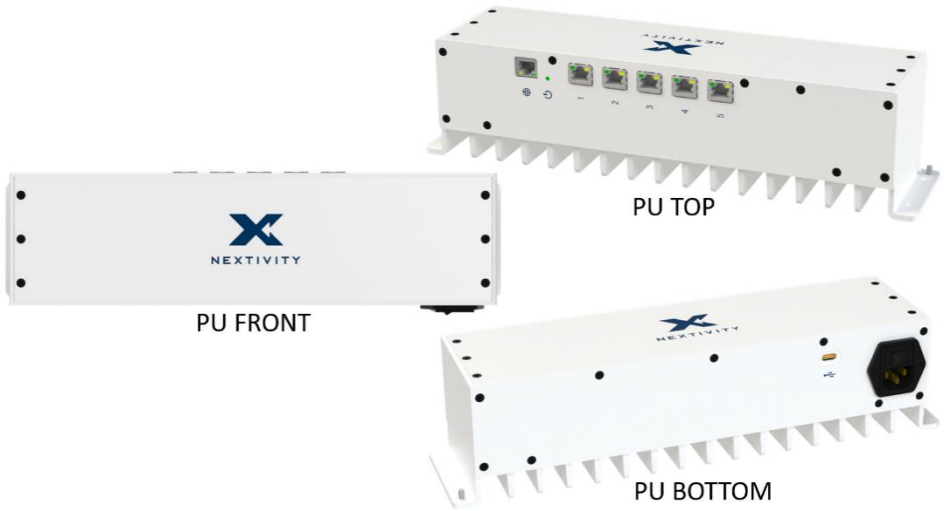

Figure 7: Power Unit (PU) – Front, Top, and Bottom Views

Power

- AC Power is supplied to the PU with the included 1.8m AC Cable to the C-14 power inlet.

Physical Interfaces

- One WAN RJ45 10/100 BaseT Ethernet port, for connection to the local site network, WAVE Portal link and IoT device connectivity.
- Five PoE+++ RJ45 output ports for connecting NUs and CUs.
- One USB-C port for local WAVE Field Tool (WFT) management

User Interfaces

- Device power & status LED
- WAN/Internet RJ45 port power and activity LEDs
- Five device connection RJ45 ports power and activity LEDs

Donor Antenna

The donor antenna is used to collect the donor signal from an over-the-air public or private network.

Each donor antenna should be mounted safely and securely where it can access the desired public or private network. A 50 Ohm impedance coaxial cable connects the donor antenna to the NU's 4.3-10 (f) RF port, usually through a properly grounded lightning arrestor.

Nextivity University has extensive online training for donor antenna-related issues. To gain access to Nextivity University, visit https://nextivityinc.com/support/

Donor antennas should cover the frequency range of 700 MHz to 4200 MHz. Nextivity donor antennas that operate in this range are the **LPDA-R** and **A52-FV3-300**.



Figure 8: Nextivity Donor Antennas – LPDA-R (left) and A52-FV3-300 (right)

Small Cell Donor option

A small cell may also be used as a donor source. It must be commissioned and providing tested service before being connected to the NU donor port with proper attenuation. Only then should the QUATRA 100M be powered ON. The recommended signal level for a small cell, after connection losses and attenuation should be between -75 and -80 dBm RSRP into the NU donor port for that operator. Use the Radio Data page on the WAVE Portal to verify the RSRP input power level and adjust attenuation if needed. 70 dB is a typical attenuation level.

It is advisable to discuss with Nextivity small cell specifications and parameters such as PLMN-ID, SSB channel number or GSCN, etc. before deployment of a specific small cell. This is essential for private network deployments, because private network PLMN-IDs and channel details must be centrally configured by Nextivity, prior to deployment.

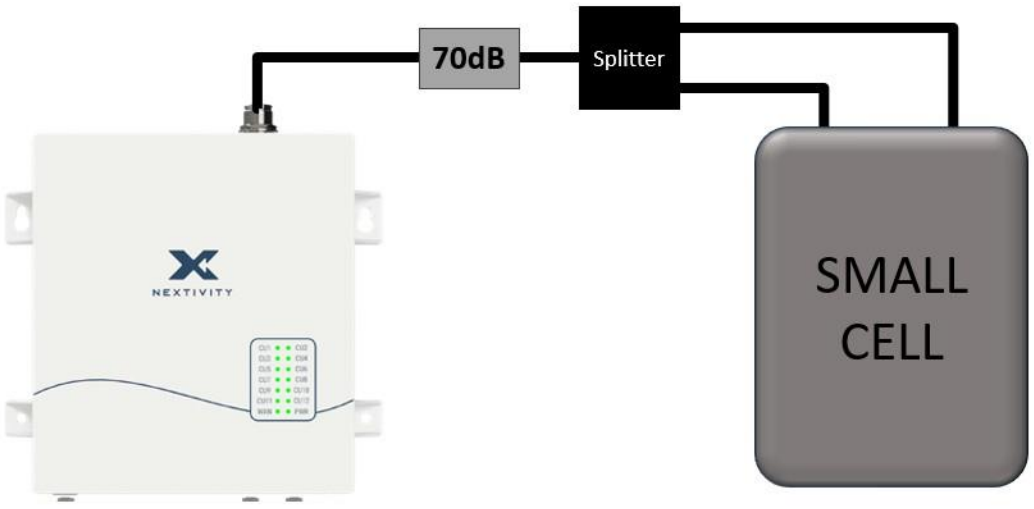

Figure 9: Small Cell Donor Connection to NU

Server Antennas

Server antennas connect to the 4.3-10(f) RF port on each CU and distribute cellular service throughout the building. A single antenna may be used per CU for wide open spaces and to save time, but it is more common to employ a Distributed Antenna System (DAS) of multiple server antennas to distribute service over a larger area or to overcome attenuation from walls and other structures.

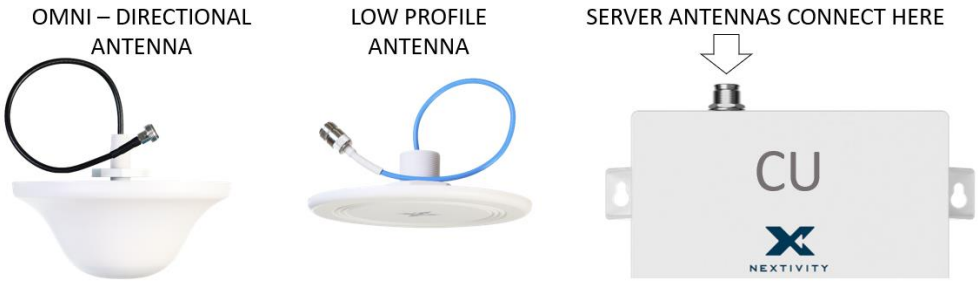

Figure 10: Server Antenna Examples and CU Connection Point

See the Nextivity University for helpful details on DAS design and tools.

Smart Server Antennas and Modules

In addition to off-the-shelf DAS server antennas, the QUATRA 100M also supports Nextivity's Smart Antennas and Modules. These devices overlay extra IoT functionalities onto the QUATRA 100M coverage areas wireless Internet-of-Things devices. Example IoT devices are Panic Buttons for personnel safety and various sensors used in manufacturing or asset tracking. Please Appendix B see for more information.



Figure 11: Smart Server Antenna (left) and Smart Module (right)

Passive DAS Components

Coaxial cable, RF couplers, tappers and splitters may be used to connect CUs with multiple service antennas for greater in-building coverage, and they are ordered separately according to the needs and design of the specific in-building system. Careful system design should be implemented to ensure sufficient radiated power for all antennas. Couplers should be specified

that are appropriate for the power and frequency bands that QUATRA 100M supports (700–4200 MHz).

➲ **NOTE:** Nextivity University is an excellent source of how-to information when learning about antennas and distributed antenna systems (DAS).

4 | Software & Management Tools

4.1 Nextivity WAVE Portal



The WAVE Portal is Nextivity's SOC2 Type 1 compliant cloud-based software platform from which CEL-FI apps and connected devices are managed. Current-generation CEL-FI products feature embedded connectivity that allows them to connect to the WAVE cloud. The WAVE Portal and apps facilitate software updates, registration, commissioning, installation, optimization, and troubleshooting. The CEL-FI WAVE platform continues to expand in features and function.

In order to use the WAVE Portal and related capabilities, **you must complete Nextivity University training**.

The portal constantly monitors your systems and tells you how to resolve alarms or improve performance with explicit guidance, all from your smartphone or computer browser.

The internet/portal connection method should be determined and prepared prior to installation. This will ensure that the portal is connected and available for commissioning and settings.

Key capabilities include:

- **Operator & Band Selection** – Choose which operator and bands/channels to relay, either automatically or manually.
- **System Health Monitoring** – Track system status and receive alarm notifications via the portal, email, or text message.
- **Remote Settings Management** – Adjust system settings from any location.
- **Performance Optimization** – Get real-time tips to enhance performance, based on live system data.
- **Remote Troubleshooting** – Access hourly or real-time KPI measurements to diagnose issues without requiring a site visit, saving time and costs.
- **Coverage Testing & Reporting** – Perform coverage measurements and generate reports using the COMPASS XR unit.

- **Automatic Software Updates** – Ensure all system components have the latest features and enhancements.
- **System Mapping** – View the geographical location of your installed systems.
- **Site Documentation** – Record site details, including floorplans and system layouts.

4.2 Nextivity Tools

Nextivity offers a range of software and hardware tools to support design, installation, optimization, and management of CEL-FI QUATRA 100M systems. For detailed specifications, see Appendix D or visit nextivityinc.com.

- **Online system design tools** – including the Nextivity BOM Estimator.
- **WAVE Portal** – browser-based remote Network Management System (NMS).
- **COMPASS XR** – portable scanner for surveys and antenna aiming.
- **WAVE Pro App** – (iOS/Android) interfaces with COMPASS XR for control and data collection.
- **WAVE Field Tool (WFT)** – Windows-based program for local system management.

4.3 Online Planning Tools (iBwave Templates, Partner Portal Resources)

Before finalizing the system plan, take advantage of Nextivity's digital planning resources:

- **Nextivity BOM Estimator** – Available in the Nextivity Partner Portal; provides guidance on:
  - Number of NUs, CUs, and antennas needed for each area
  - Required antenna separation distances
- **iBwave RF Planning Resources** – iBwave VEX and template files are available in the Nextivity Partner Portal for detailed RF planning.
- **Partner Portal Access** – Your gateway to Nextivity University, documentation, templates, and online tools.

These tools allow you to model system layouts, calculate component requirements, and prepare an accurate **Bill of Materials** before installation.

5 | Installation Process (Project Step-by-Step)

This section provides a structured, step-by-step guide for installing and commissioning the **CEL-FI QUATRA 100M system**. Each step builds on the previous one, from initial site survey and system planning to hardware installation, cabling, commissioning, and final evaluation. The goal is to ensure a reliable installation that **maximizes system performance and minimizes troubleshooting**.

For best results, follow the instructions in this section closely and refer to the supporting Nextivity University lessons for detailed demonstrations, best practices, and real-world examples.

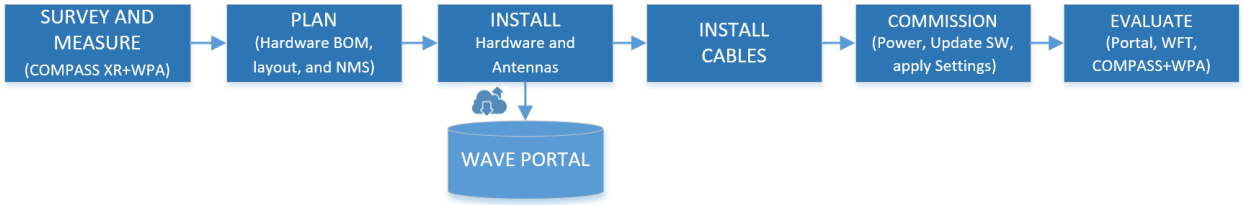

> **IMPORTANT:** For each step in this manual, refer to the relevant Nextivity University lessons for detailed information and examples.

5.1 Step 1 – Survey & Measure

For signal surveys, or to find candidate locations for donor antennas, or aim donor antennas, we recommend Nextivity's **COMPASS XR** tool and **WAVE Pro app (WPA)**. Ask your distributor for more information, learn more about surveys in Nextivity University, or visit us at www.nextivityinc.com.



Goal:

Collect the information needed to:

- Select a system configuration (e.g., single or multiple operators)
- Determine where hardware, antennas, and cabling should be located

The goal of this step is to collect the information you will need to select a system configuration (single or multiple operators for example), and eventually decide where hardware, antennas and cabling should be located.

5.2 Step 2 – Plan the System

The QUATRA 100M is a modular system that supports many different configurations depending on project needs. Visit the Nextivity Partner Portal for a current list of planning tools.

- **Basic system Layout:** single operator, up to 12 Coverage Units (CUs)

- **Expandable:** deploy multiple systems to cover larger areas or support multiple network operators/private networks

1. Large Scale System - To illustrate this concept, Figure 12 below shows a configuration where twenty-four CUs are supported in a large building. This is accomplished by adding an additional Network Unit (NU) and Power Units (PUs), allowing the system to scale for expanded coverage.

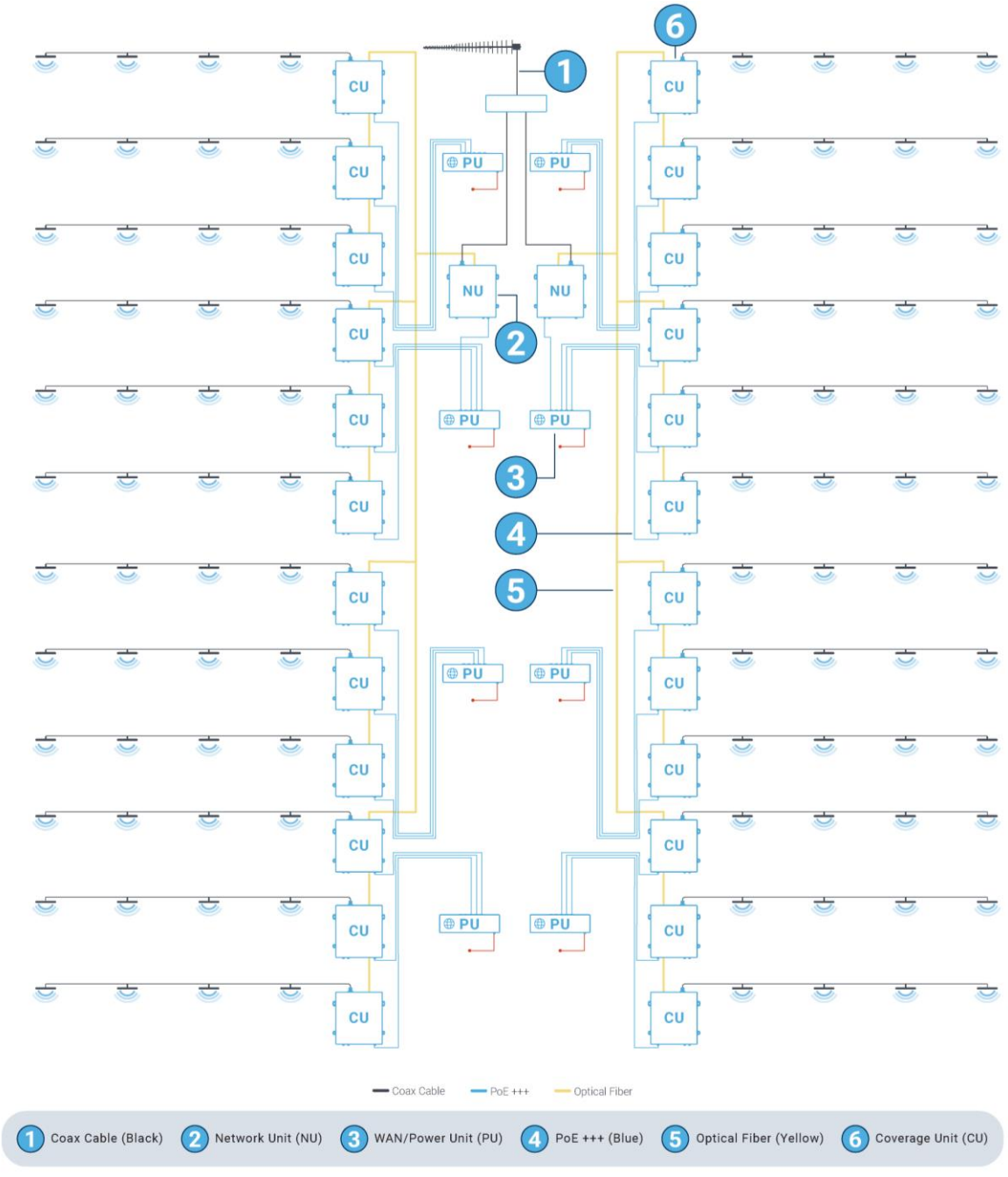

Figure 12: Expanded QUATRA 100M Deployment Example. Two NUs with associated PUs support up to 24 CUs, demonstrating how the system can be scaled to cover larger buildings

2 Single Operator 100M plus 4000 series EVO – In this configuration a 100M has been combined through a Hybrid Combiner before signal injection in the Distributed Antenna System. Note that both the 100M and 4000 series products support Smart Devices at different CU server port DC voltages, Only one of the systems should be used to integrate Smart Devices (likely the 100M which has advanced capabilities). Therefore if a splitter/combiner is used to merge the systems then the 4000/EVO CU server port requires a DC Block to prevent 100M 12 VDC from impacting the 4000/EVO CU 5 VDC or damage will occur to the 4000 series CU.

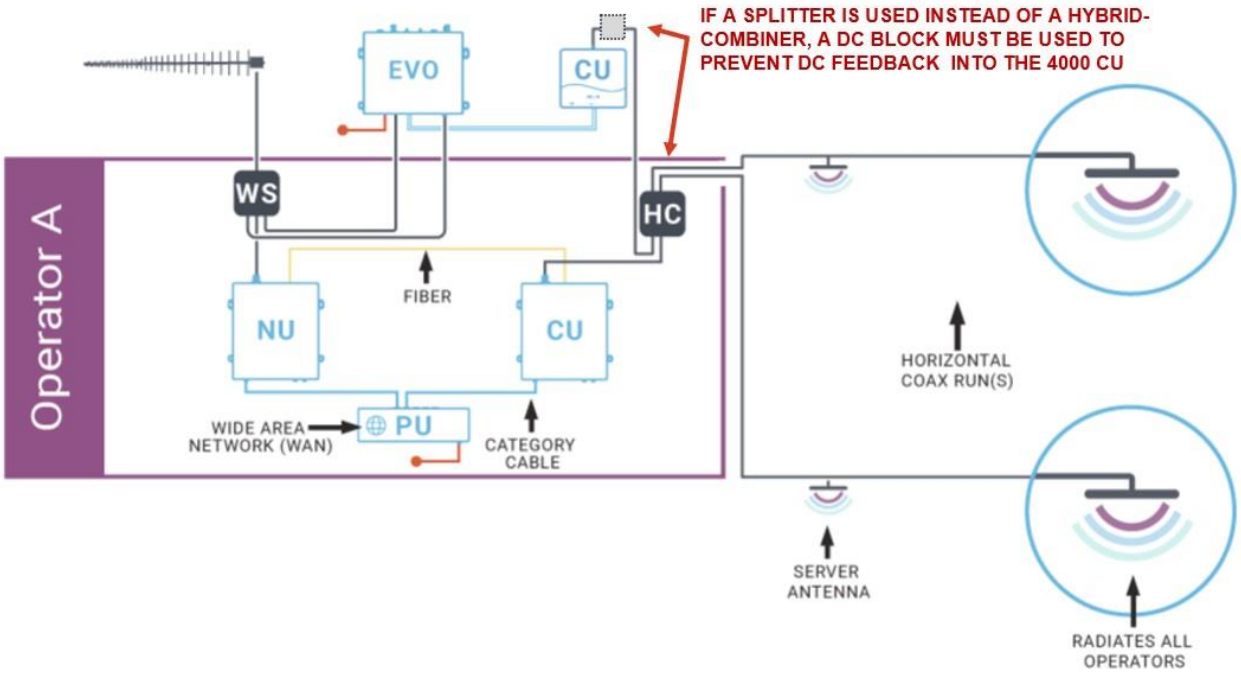

CAUTION: When combining products that support Smart Devices at different DC voltages, a DC Block must be used on the CUs of the system that will not be supporting Smart Devices, or CU damage may result.

Multi-operator cabling options:

1. **Hybrid Combiner Method** – In this setup, signals from multiple CUs are combined through a hybrid combiner and then distributed to shared server antennas. Figure 13 below shows an example of a three-operator configuration using this method.

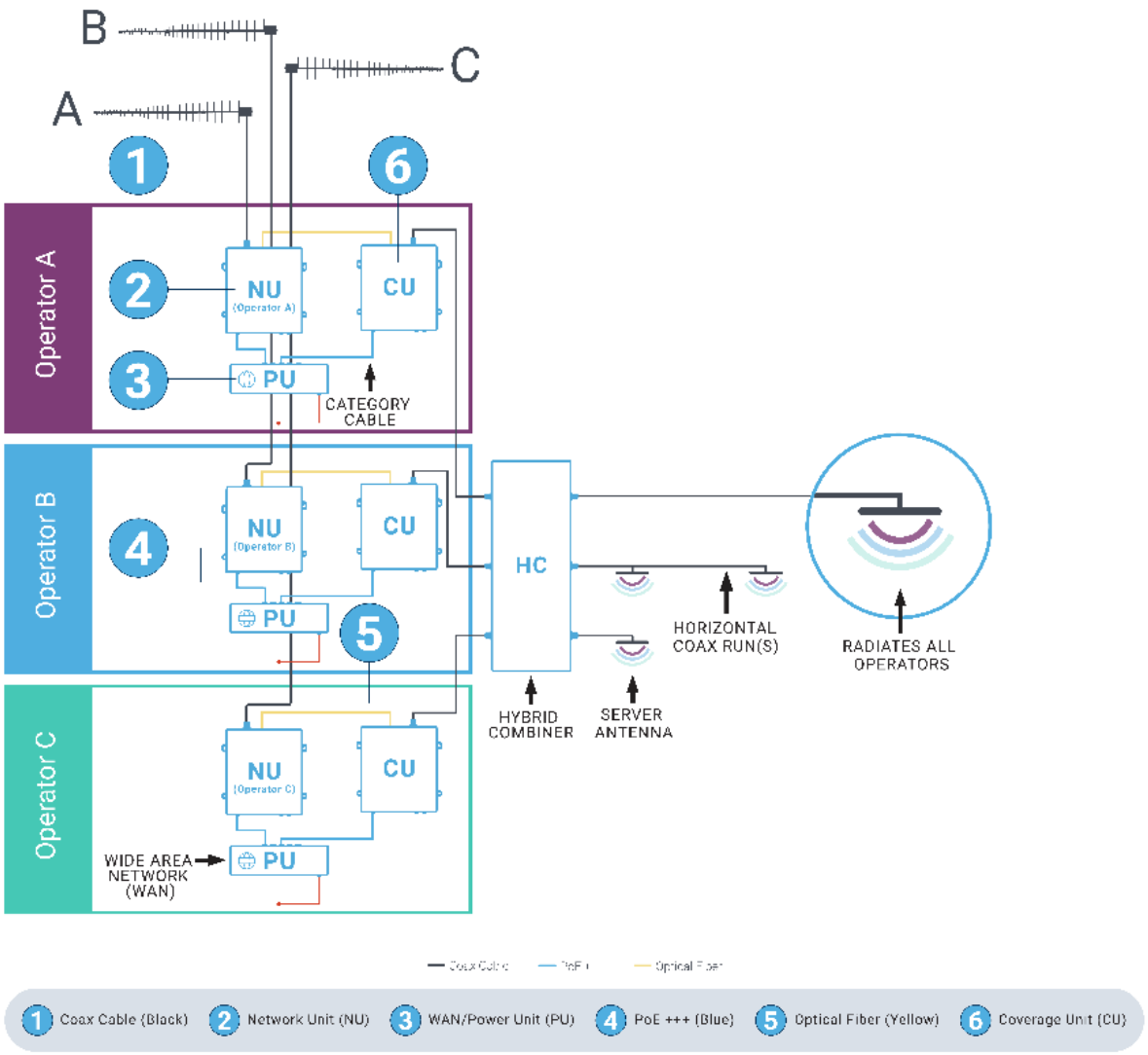

Figure 13: Multi-Operator Setup with Hybrid Combiner – Signals from three operators combined and sent to a shared antenna.

2. **Parallel RF Cabling Method** – Alternatively, each CU can be connected directly to server antennas via parallel coax runs. These antennas typically include multiple radiating elements (e.g., MIMO antennas) that accept separate connections for each operator. Figure 14 below illustrates this method.

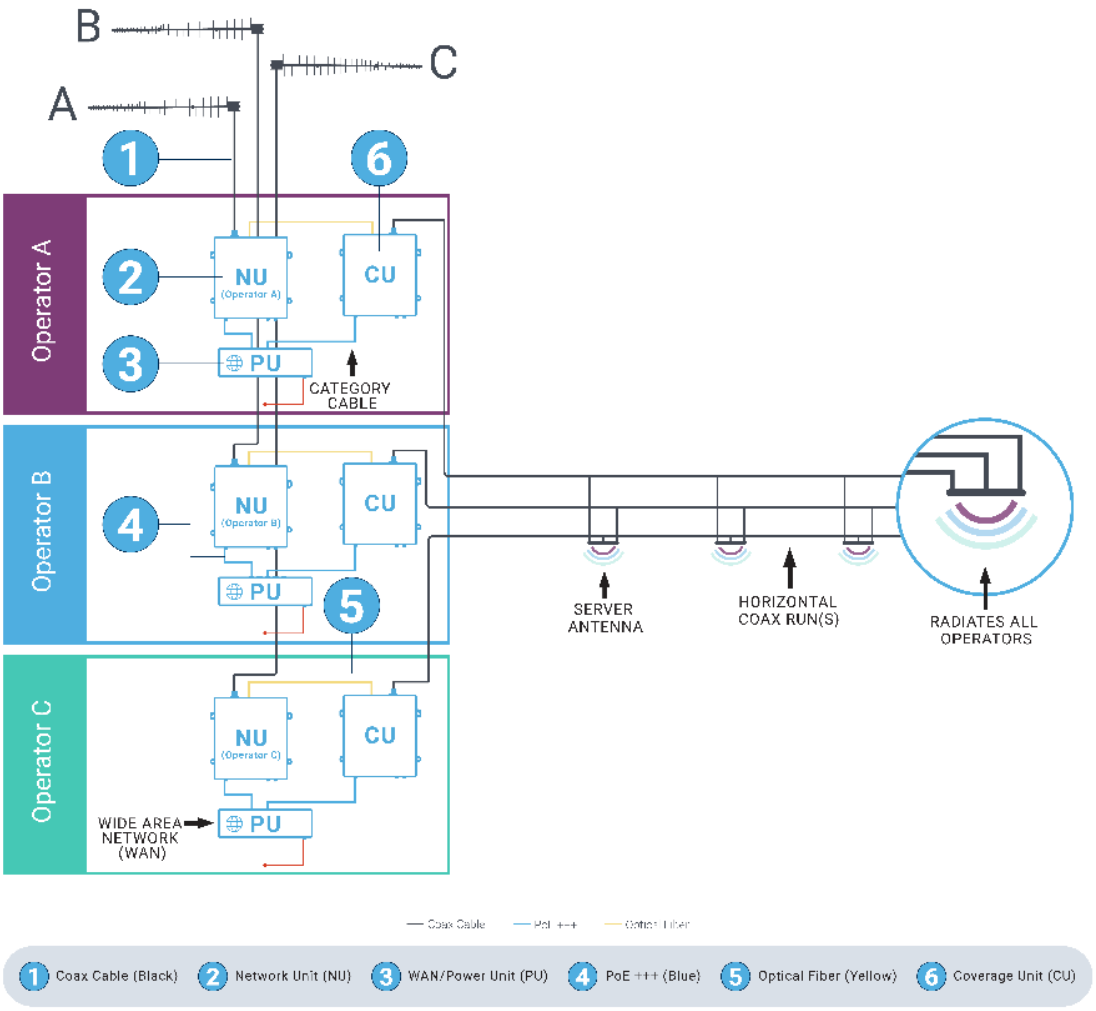

Figure 14: Multi-Operator Setup Using Parallel RF Cables and Multi-Element Antennas. Separate coax runs from each CU connect to antennas with multiple radiating elements, supporting multiple operators without a combiner.

5.3 Step 3 – Install the Hardware and Antennas

Hardware Mounting

- NU, CU, and PU may be wall mounted with supplied hardware or mounted on vented IT rack shelves
- Leave space for connectors, cabling, and minimum bend radius requirements

- Ensure product labels and LED indicators remain visible

Special CU Mounting Considerations:

- Install CUs near server antennas to minimize coaxial cable loss
- Options include wall mounts, Unistrut scaffolding mounts, and suspended ceiling tile mounts

NU, CU and PU may all be wall mounted with the supplied wall screws and anchors. Note that the NU is usually located in an IT (MDF/IDF) or utility closet with donor coaxial cable access to a roof donor antenna. CUs and PUs may be mounted where convenient for the layout of the system, and each PU will need access to an AC outlet.

The following mounting hardware is provided:

NU/CU

- Phillips Pan Head Screw, #12 × 1.5 in
- Drywall conical anchors, #12

PU

- Phillips Oval Head Screw, #6 × 7/8 in (0.875 in)
- Drywall conical anchors, #6

The following tools are recommended:

- Power drill/screwdriver
- Hammer
- Pencil or similar marker
- Level

⚠ **CAUTION:** Make sure the area behind any surface is free of electrical wires or other dangerous elements before drilling.

Level each unit against the wall and secure it using the supplied wall anchors and screws, while leaving space around each unit for connectors and cabling with consideration for the minimum bend radius of each cable type. The NU may also need a grounded grounding bar, lightning arrestor, and drip loop for the donor coaxial cable.

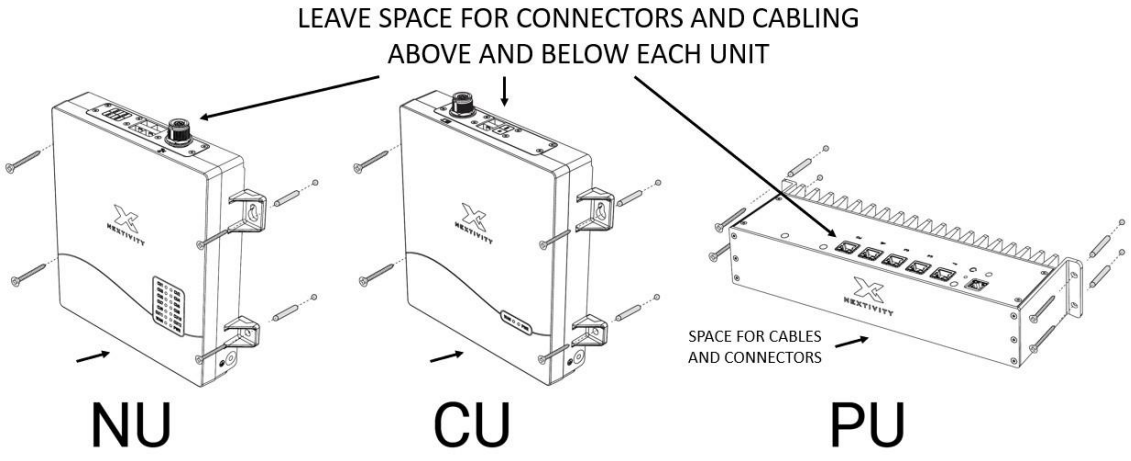

Figure 15: Wall Mounting for NU, CU, and PU – Leave clearance for connectors, cabling, and bend radius when securing units with the supplied wall anchors and screws.

It is also advisable to make sure that the product label with Serial Number and faceplate LEDs are easily visible once the unit is mounted.

Rack Mounting Option

NUs, PUs, and CUs may also be secured to vented (perforated) IT rack shelves. Please make sure that your shelf is adequately vented.

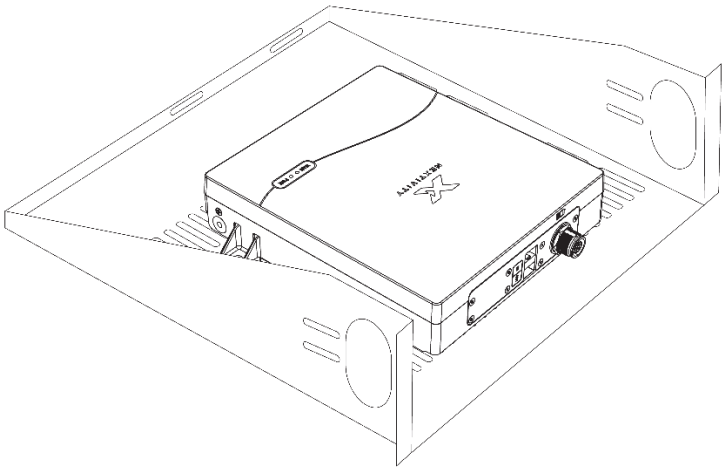

Figure 16: Additional CU Mounting Options

Special CU Mounting Considerations

As illustrated in the example system diagrams, CUs are usually installed throughout the building where they can be close to their respective server antennas with minimal coaxial cable length loss. They may be wall mounted as described above, or CUs may be mounted to existing scaffolding hardware such as Unistrut using the two ¼”-20 screw holes on the back of the unit.

A suspended ceiling tile mount is also available. Ask your point of sale for more information.

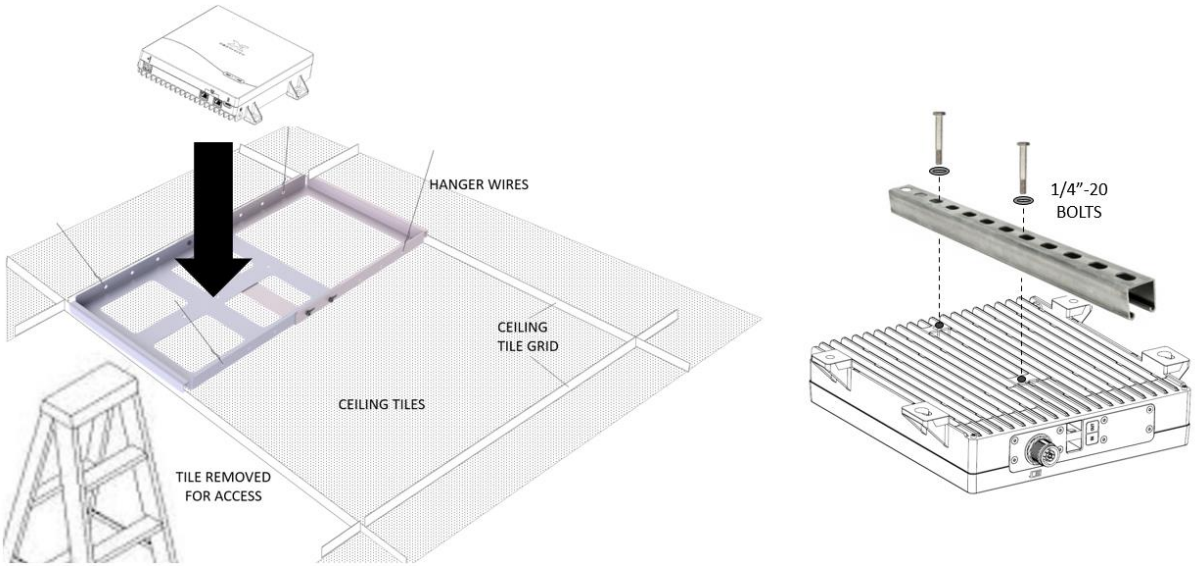

Figure 17: Special CU Mounting Options

Donor Antenna(s)

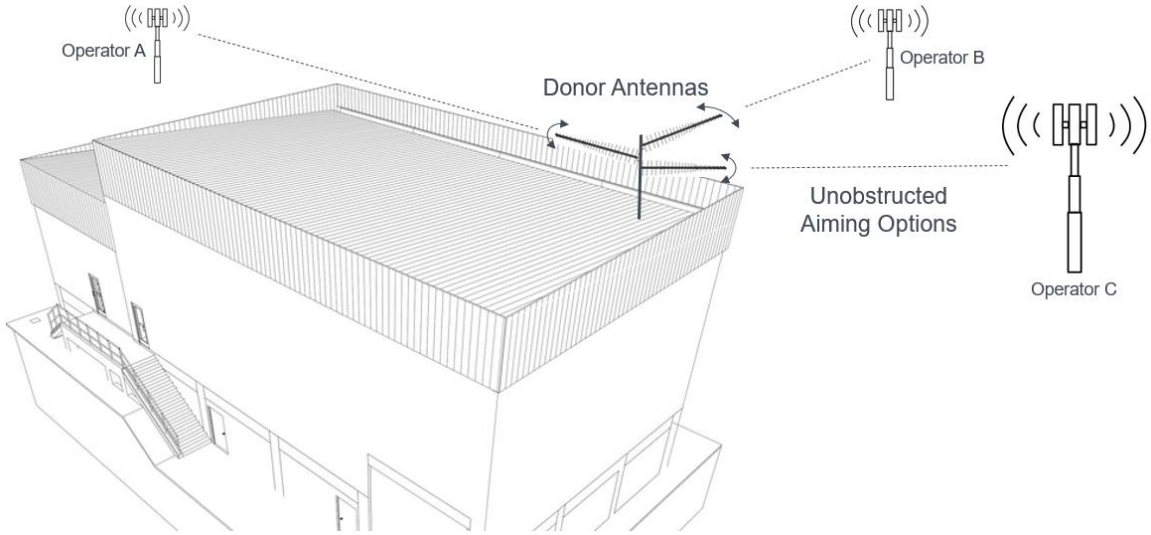

Figure 18: Example rooftop installation showing donor antennas with unobstructed aiming options toward multiple operator base stations.

> **IMPORTANT:** Proper donor antenna selection, placement, and aiming are the critical factors determining indoor signal quality and data rates. Take your time to maximize the Signal-to-Noise (SINR) ratio for all relayed cellular channels.

Mount the donor antennas at the best location as determined by the Site Survey. This location should satisfy the following criteria:

- The **best signal quality for the operator or private network that the antenna serves**.

- For **multi-operator configurations, plan to use separate dedicated directional donor antennas** for each operator or private network donor cell.
- The antenna should have an **unobstructed view of multiple candidate base stations** (choices).
- The **antenna should not be close to or pointed at other antennas**, including the indoor server antennas.
- The **antenna should not point directly at signal blocking structures**.
- The **coaxial cable from the antenna to the NU should be low-loss and as short** as is practical.
- The **donor antenna should be at least 1.5m above the plane of the roof or mounted on the side of the building**.
- The **antenna mount should be secure against wind loading**. This is usually an existing structure, pole, or a weighted non-penetrating roof mount antenna mast.
- **Weatherproof all fittings and cable entrance points** into the building.
- **Observe coaxial cable bend radius, low-voltage cable pathways, grounding loops** if appropriate, and the use of grounded lightning arrestors.
- Consider a **drip loop in the coaxial donor cable** to avoid possible water dripping down the cable and into the QUATRA 100M system installation location.

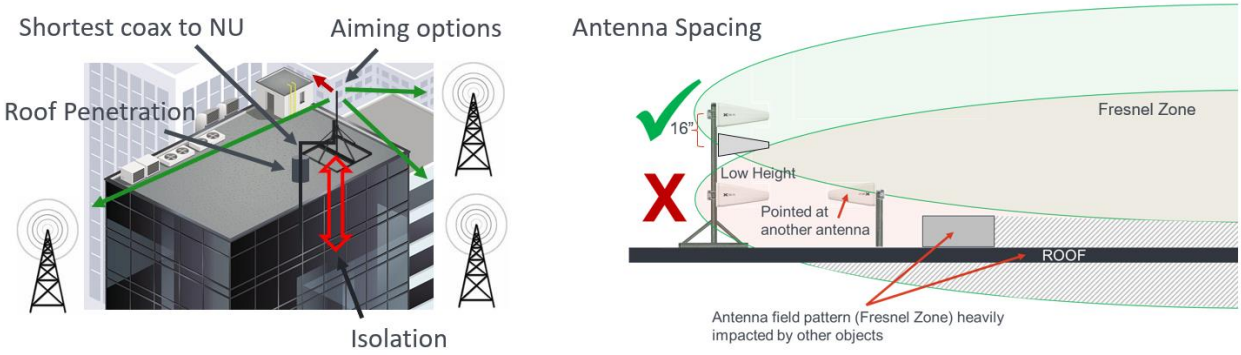

Figure 19: Donor antenna placement considerations – roof penetration, isolation, aiming angles, and Fresnel Zone clearance to maximize SINR and minimize interference.

Server Antennas

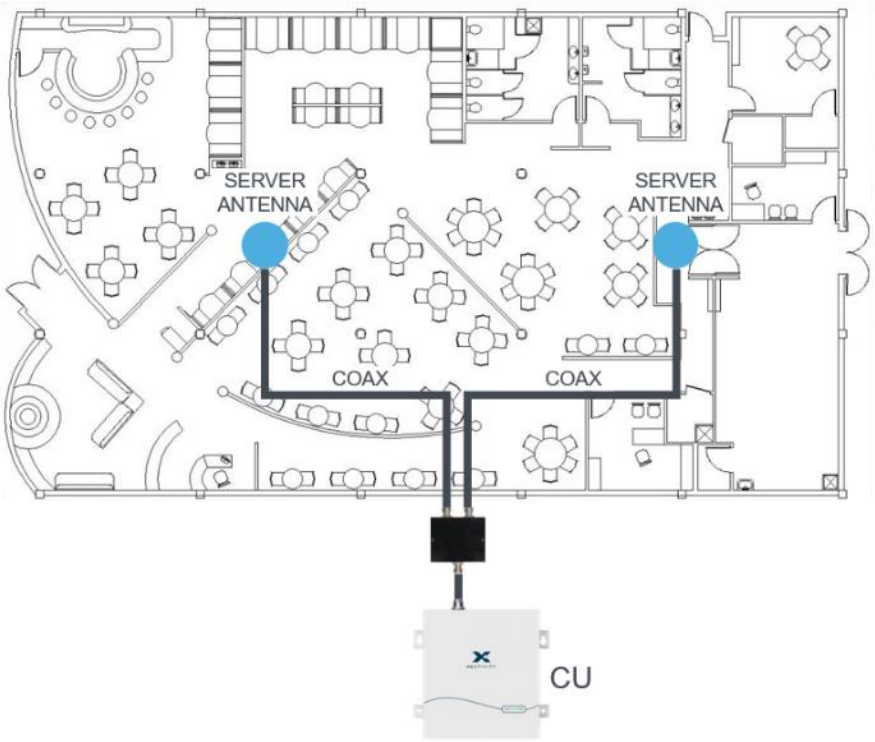

Figure 20: Example server antenna layout. Two ceiling-mounted omnidirectional antennas connected via coax to a CU, distributing coverage across an open office floorplan.

Omnidirectional downward-facing server antennas are generally mounted on ceilings where they can cover the greatest area possible with minimal influence from signal blocking structures. Other options are also available, such as directional antennas that beam in from the side of a warehouse or down a tunnel. Mount server antennas as determined in your site plan using the antenna's mounting instructions.

If installing Smart Server Antennas or Smart Server Antenna Modules, follow the included Quick Start Guide supplied in the device's carton.

➲ **NOTE:** The coaxial cable route between the CU and each server antenna may slightly influence the antenna's location to reduce cable length losses.

5.4 Step 4 – Install Cables

Optical Cables

NUs and CUs convey digitized RF signals in each direction (uplink/downlink) over user supplied duplex optical cables and SFP+ modules. An NU can connect to a maximum of four chains of three CUs each (maximum or 12 CUs per system). Do not connect more than three CUs in series.

For larger systems requiring more than twelve CUs, install multiple parallel systems and split the donor signal to multiple NUs.

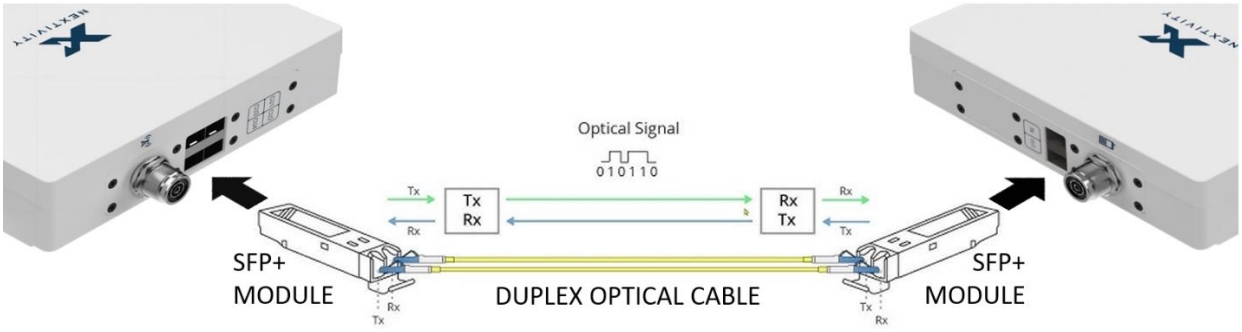

Figure 21: NU-to-CU optical link using SFP+ modules and duplex optical cable for digitized RF signal transport.

Either Single Mode Fiber (SMF) or Multimode Fiber (MMF) cable and modules may be used, provided they are SFP+ (10Gbps) compliant over the length of each cable run. Note that MMF generally cannot exceed 300 meters in length at 10 Gbps. The optical cable, cable connector and SFP+ modules in a cable run must match mode and connector type.

See Appendix E for more information about optical cables, terminating and splicing.

PoE+++ Category Cables

QUATRA 100M uses category cable (8-wire twisted pair structured cabling commonly used as Ethernet cable) for PoE+++ power distribution, remote management communications, and for optional IoT features. Cables should pass 10/100BaseT and be ANSI/TIA/EIA 568-B compliant.

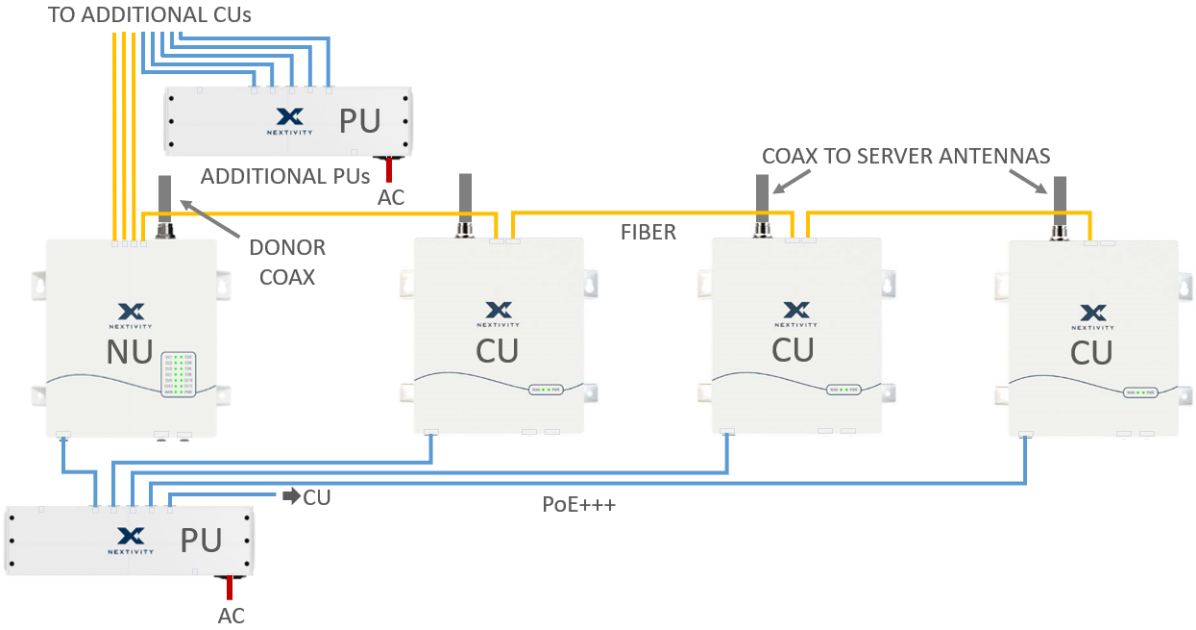

Figure 22: PoE+++ cabling example showing NU, CU, and PU connections with donor coax, fiber links, and server antenna coax runs.

Category cables to NUs or CUs must be a direct wired connection only, or via physical patch-panels and capable of supporting PoE+++.

To facilitate access for WAVE Portal remote management and IoT features related to Nextivity Smart Antennas, any PU powering an NU must connect to the site network via its “WAN” port and have access to the public Internet, according to the firewall settings (see Appendix A).

If any NU or CU has directly attached PoE IoT devices, then the PU powering it must be connected to the site network via its “WAN” port and provide connectivity as required by the PoE IoT devices.

The simplest way to achieve this is to connect all PU WAN ports to a common layer-2 site network.

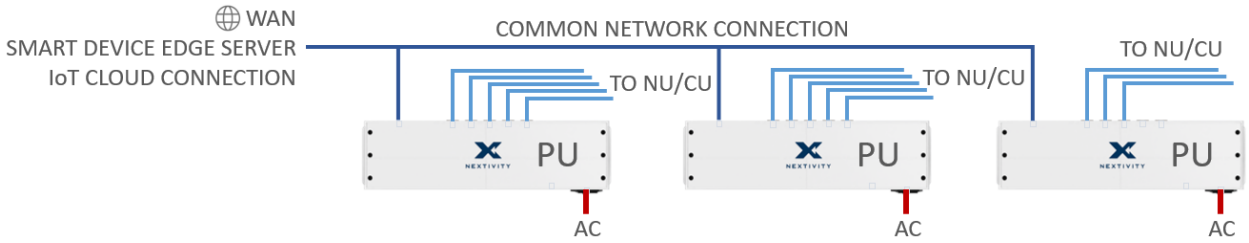

Figure 23: Common network configuration with PU WAN ports connected to provide Internet access for remote management and IoT features.

Note that while the PoE+++ Category cables from a PU usually route alongside the optical cables to each CU, this is not mandatory. The PoE+++ category cables may take a different route if it makes more sense when staying within the maximum PoE+++ cable length of 100 meters for Cat5e cable or 150 meters for 23 AWG Cat6 cable. 150 meters of 23 AWG Cat6A cable may also be used if Leviton SST or equivalent cable is used.

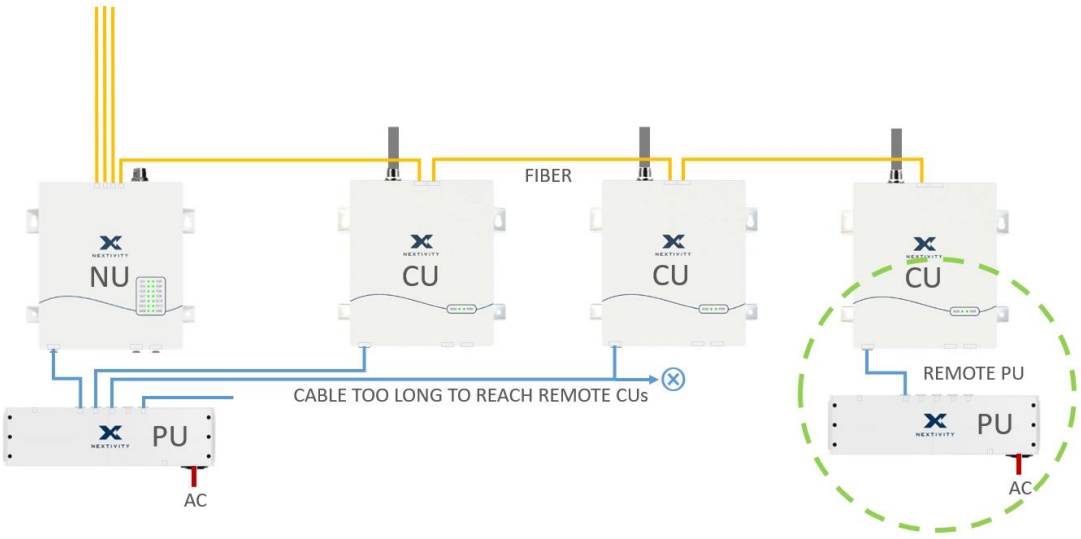

Figure 24: Example of alternate PoE+++ cabling routes, showing a remote PU used to power distant CUs when cable length exceeds standard limits

Category cables should be routed along common Low-Voltage cable pathways using conventional IT cabling practices to isolate the cables from power lines or other sources of interference. Do not run the cables alongside AC power cables unless they cross at 90 degrees. And always use the correct RJ45 connectors for the category cable being used.

> **IMPORTANT:** ONLY USE PURE COPPER CATEGORY CABLES. Copper-Clad Aluminum (CCA) cables are not PoE compliant and cannot be used.

Coaxial Cables to Antennas

Donor Antenna Coax:

Donor antenna cables should usually be low-loss, such as ½ inch Heliax or better, and as short as possible. Less expensive cables, such as LMR-400, should only be used if the donor signals are sufficiently strong. Use the cable that best fits the signal level needs of the site. While the NU can accept donor signals as low as -120 dBm RSRP, the preferred signal level into the NU is between -100 and -70 dBm RSRP for optimum throughput.

Note that a larger system (more than 12 CUs) will require an additional NU for each additional 12 CUs. In this case, a splitter connects the donor cable to each NU. It is also advisable to divide unused CU ports between the NUs, making it easier to add CUs to either NU for future expansion.

If constructing a multi-operator system, each operator will need its own NU(s) with dedicated cabled and aimed donor antenna.

Tools & Materials You'll Need:

- ✓ Coaxial cable (e.g. ½ inch Heliax)
- ✓ Short flexible coaxial jumper cables
- ✓ Donor antenna (Yagi, LPDA, parabolic, etc.)
- ✓ Crimping tool and coaxial stripper
- ✓ RF connectors (4.3-10 and N-type)
- ✓ Weatherproofing tape/sealant
- ✓ Mounting hardware (mast, brackets)
- ✓ Grounding kit
- ✓ Signal tester (optional)

Installation Steps:

1. **Plan the Route**
   - Plan the coaxial cable route in advance, keeping it as short as possible to minimize signal loss.
   - Run cables along structures and secure them with UV-resistant cable ties or clips at regular intervals to prevent movement.
2. **Protect the Cable**
   - Avoid sharp bends, kinks, crushing, and sources of electrical interference.
   - Maintain the minimum bend radius (typically 10× the cable diameter).
3. **Connector Installation and Testing**
   - Attach connectors according to the manufacturer's instructions and tooling.
   - Use a continuity tester or RF tester if available to verify cable integrity.
4. **Antenna Connections**
   - Carefully connect the cable to the antenna feed to avoid damage (tighten about ¼ turn past finger tight, but do not overtighten).
   - Weatherproof all outdoor connections with waterproof tape or rubber boots.
   - Form a drip loop to prevent water from running down the donor cable into the NU donor port.
5. **Grounding and Lightning Protection**
   - Install a grounding bar and lightning arrestor as required.
6. **NU Connections**
   - Connect the coaxial cable to the NU donor port using a short, flexible jumper cable.
   - Tighten connectors securely (about ¼ turn past finger tight but avoid overtightening).

Server Antenna Coax:

1. Plan the cable type and route to minimize cable losses.
2. Maintain separation between other antennas in the building of at least two meters.
3. Install server antennas before cabling.
4. Connect the coax to the CU server port, using a short, flexible jumper cable.
5. Mount antennas on ceilings or walls, facing downward or toward coverage areas.
6. Avoid placing antennas near metal obstructions or reflective surfaces.

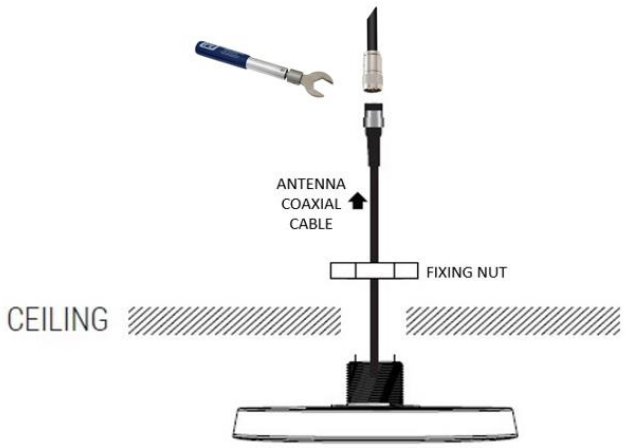

Figure 25: Ceiling-mounted server antenna with coaxial cable connection. Secure the antenna using the fixing nut and attach the coaxial cable firmly to ensure a reliable connection.

5.5 Step 5 – Power ON & Commission the System

Now that all the hardware, antennas, cabling, donor signals, and a portal connection have been installed, it is time to power up the system.

➲ **NOTE:** If a signal source for the 100M is a small cell, including the use of a Private Network signal source, then make sure that signal source is operating properly and providing service to the 100M before powering the 100M on.

Plug in and turn ON all PUs the system uses. All NUs and CUs should power-on.

➲ **NOTE:** To prevent accidental unplugging, it is recommended that the C14 power cord be zip-tied or otherwise secured once the system is powered up.

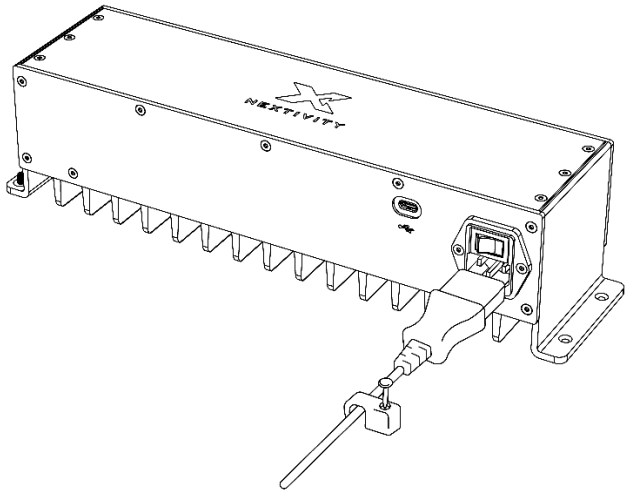

Figure 26: Powering the PU. Connect and switch on the PU power cord, then secure the cord (e.g., with a clip or zip tie) to prevent accidental unplugging.

Commissioning the System

Commissioning a system involves the following activities:

1. Power up the completely installed system.
2. Follow **New System** commissioning process if connected to the WAVE Portal.
3. Update software on all system components.
4. Apply settings.
5. Resolve any alarms.
6. Consider guidance suggestions relating to system performance provided by the WAVE Portal.

Commissioning - WAVE Portal Method (Preferred)

Complete the Nextivity University training to gain WAVE Portal access.

This is the simplest method of commissioning a system because it is guided, software is updated automatically, and there are more diagnostic tools available. And if there is ever a need to interact with a site for troubleshooting, you can do it remotely without the time and expense of a site visit. If the site does not provide a suitable LAN connection, you can always temporarily or permanently create one with a cellular modem.



On power-up the system will automatically reach out to the Nextivity Cloud and become visible in the Wave Portal, which is accessible using your PC, Tablet, or cellphone internet browser.

Each cloud-connected system sends hourly performance data to the portal, so performance is trackable over time. If you are actively viewing the **Radio Data** page for a system on the portal, the portal gets more frequent updates from the NU. Some of the portal features are:

- Geographical map of installed systems
- Statistics and alarms
- Notifications (browser console, texts, email)
- Installation Site details
- Detailed system performance information
- Settings and control

- Software updates
- Remote diagnostics
- Automated analysis and guidance with improvement suggestions for each install
- Floorplan coverage grid test interface for the **COMPASS XR**
- Grid test automated report generation
- Cloud storage for your site documentation

First, gain access to your QUATRA 100M system, using details form the NU carton label.

Click on the portal **Access** tab (lower left portal screen) and select the **Request Access** option under the upper right screen **Options** menu (see Figure 27). Input the NU serial number and the SKU (Nextivity P/N) from the NU carton label, and access should be immediately granted. If the NU carton has been discarded, contact your point of sale or Nextivity Support to obtain access.

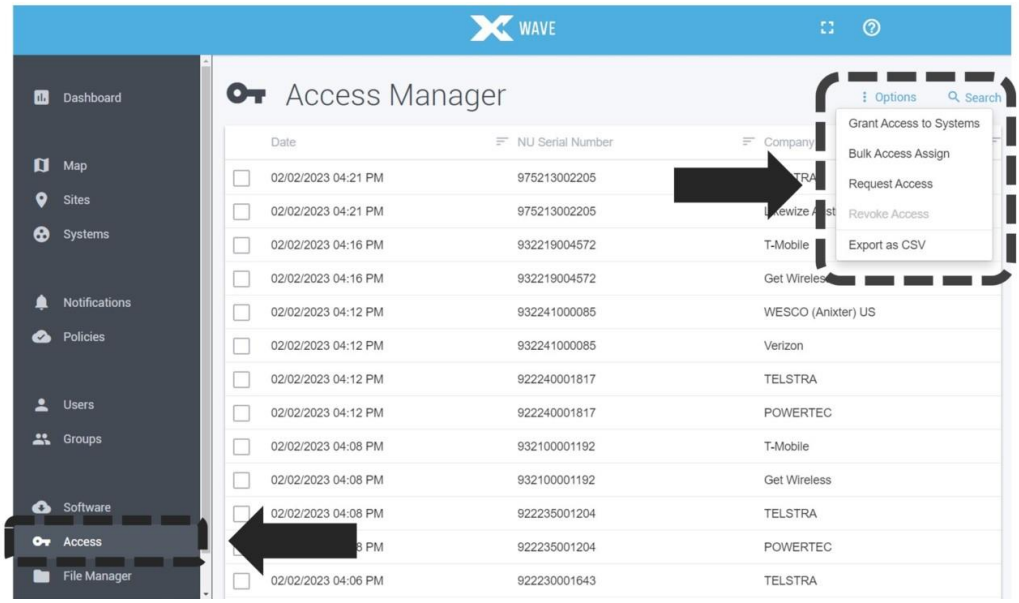

Figure 27: Registering Your NU in WAVE Portal

Go to the **New Systems** page and select your NU by its serial number and follow the commissioning prompts.

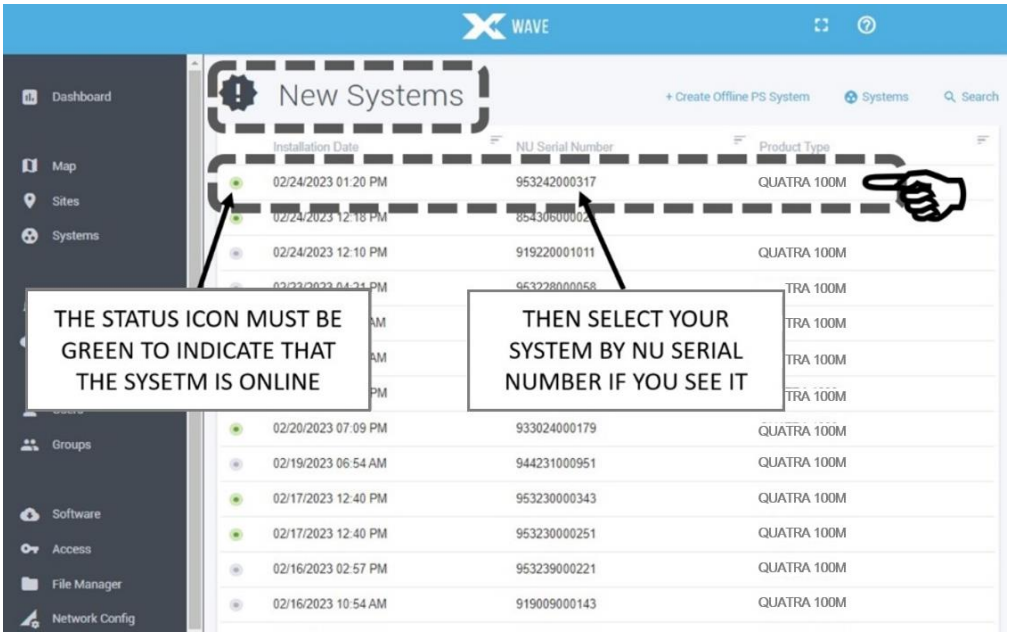

Figure 28: Selecting NU Serial Number in WAVE Portal

➲ **NOTE:** If you do not see your NU on the portal within ten minutes after powering up the NU (**New Systems** page or **Systems** page), or the status icon next to the NU serial number is grey-colored, then there is likely a connectivity problem between the device and WAVE Portal.

Troubleshoot the portal connection and then retry. Use the **WAVE Field Tool (WFT)** to test the portal firewall connection using a Windows 10 or later PC. This tool has many features, including the **Connectivity Test** to emulate the system connection to test your firewall.

See: Learn More about LAN Firewall Settings and WAVE Field Tool.

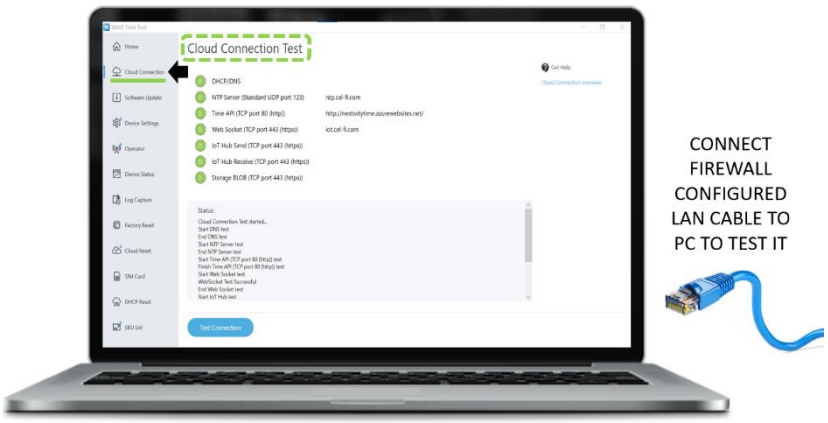

Figure 29: WAVE FIELD Tool (WFT) – Windows Program

By now you should be able to see the online NU on the portal and select it to begin the guided commissioning process. You will be prompted to provide **Site name and address details**, or you may skip the step by adding the system to an existing Site where these fields have already been filled out. Then you will be prompted to input the system **Name** and **Mode**.

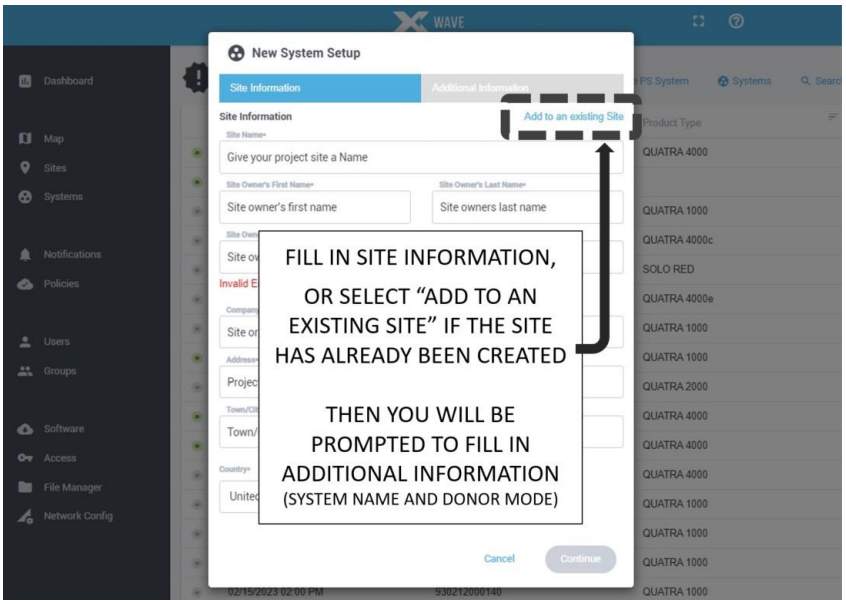

Figure 30: New System Setup

Once these commissioning steps are complete, your system will leave the **New Systems** list, and it will appear on the **Systems**, **Map**, and **Site** pages where all "in-service" systems are managed.

> **UPDATE SOFTWARE:** This is an important step. A new system likely contains hardware with different software versions due to manufacture date. To update and harmonize component unit software on a WAVE Portal connected system, select **Update Software** from the **Options** menu on the **Systems Page** as shown below.

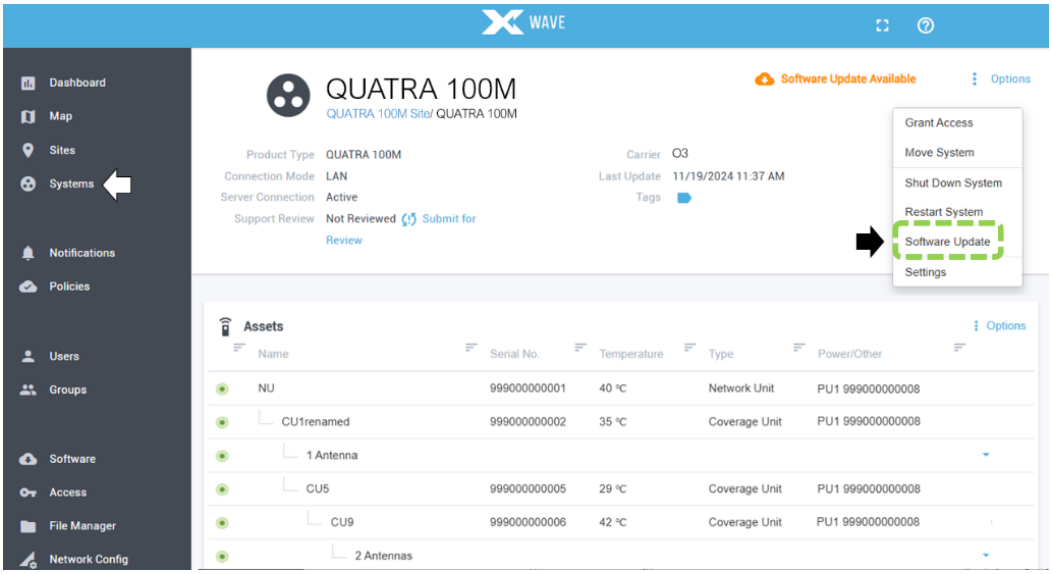

Figure 31: Updating Software – From the Systems page Options menu, select Software Update to harmonize software versions across all system units.

➲ **NOTE:** It can take over 30 minutes to update the software on all system units.

Next, we will apply basic settings. Open the **Systems** page **Options** menu again and select **Settings**.

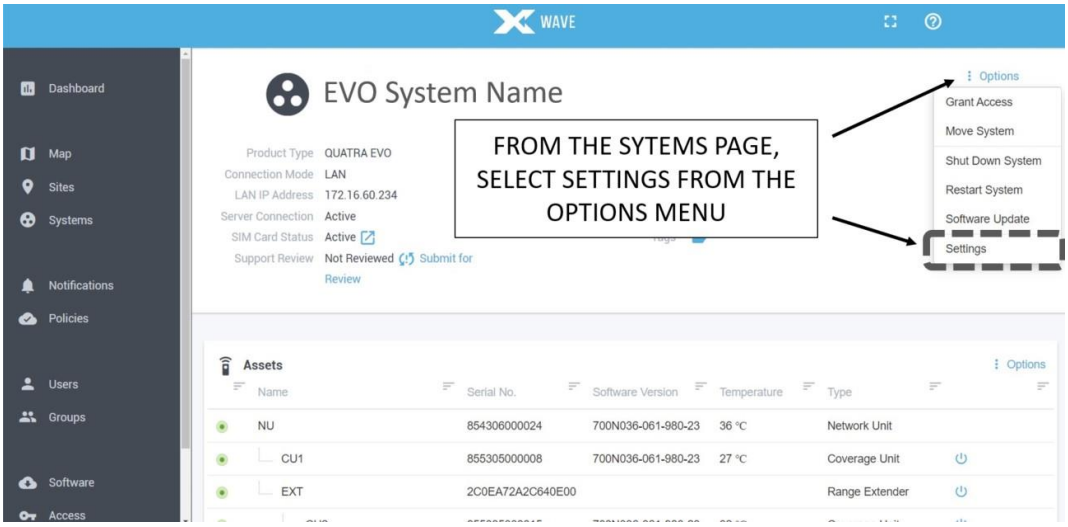

Figure 32: Accessing Settings – From the Systems page Options menu, select Settings to configure operator and antenna parameters.

Use the drop-down **Operator Settings** field to select the cellular operator you want for each NU and its connected CUs.

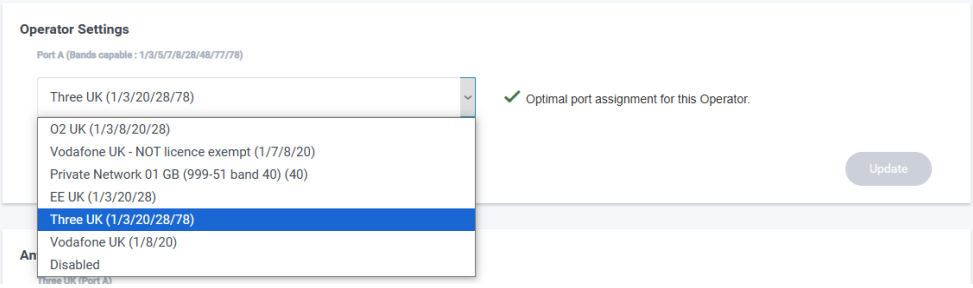

Figure 33: Operator Settings – Use the Operator Settings drop-down to select the cellular operator for each NU and its connected CUs. Options are filtered by installation country.

The available operators and private networks are filtered according to the country of the address specified for the installation, during commissioning. If you do not see the expected operators in the drop-down list, then check that the country of the containing site for this system is set correctly.

Also select **Antenna Settings**. The default is "**External**" for used with a Donor Antenna, but a "Small Cell" may also be selected if used as a signal source.

The system will automatically assign the bands and channels with the highest priority, or they may be manually selected within the **Settings** menu and the bottom of the **Settings** page. For larger single-operator systems, each NU should share the same settings. For multiple-operator systems, each NU will have unique cellular operator settings.

Your system should now be operational and relaying. **If not, troubleshoot the system using unit LEDs and the Troubleshooting section of this User Manual**, or select any displayed alarm notification on the portal for more information about how the resolve alarm.

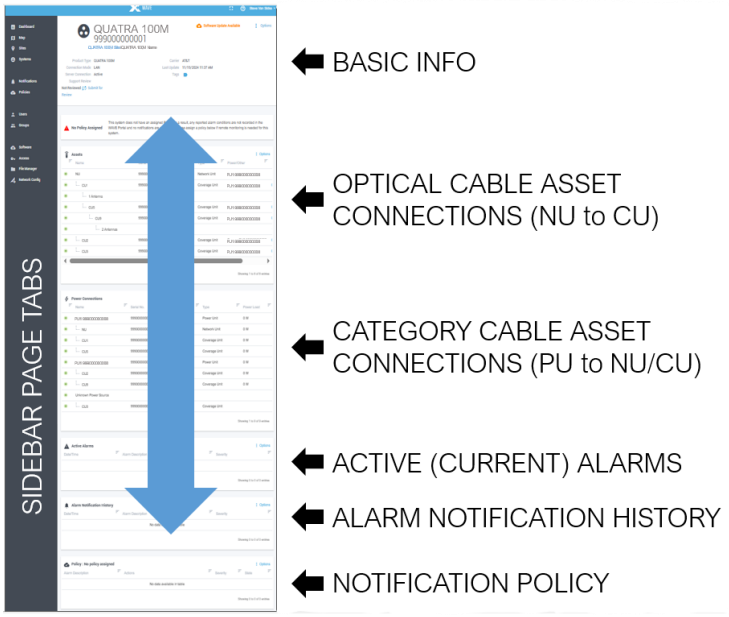

Figure 34: WAVE Portal Systems page with system info, cable connections, alarms, and notifications accessible via sidebar tabs.

Commissioning – WAVE Field Tool Method

If you cannot get an internet connection to system WAN ports (PU and Power Injectors), then it is possible to commission the system and update software using the WAVE Field Tool.

Download the WFT program and run the program with the computer connected to each unit using a USB-c DATA cable (not a charge-only cable). The PC must have an internet connection to retrieve the software, and each unit being updated must have power. All components must be updated.

Step A: Update the software on every PU and CU before installing them (CUs can be hard to reach once installed).

Step B: Update the software on the NU.

Step C: With the NU still connected to the PC, use the WFT to select the Operator and apply device settings for donor ports, bands or channels.

Step D: Select Device Status to evaluate performance or check alarms.



Figure 35: Commissioning with the WAVE Field Tool — connect a PC to each powered unit (NU, CU, PU) via USB-C data cable to update software, configure settings, and check device status.

Documenting Hardware Locations

You can upload building floorplans to the WAVE Portal using the File Manager feature of your Wave Portal. Then using the Survey Editor for the Site in the WAVE Portal, you take the uploaded building plans and create a building description, this has several purposes:

- It creates a survey package for performing building coverage tests using the **COMPASS XR scanner**.
- It can act as a design repository showing the placement of hardware in a building (NUs, CUs and server antennas.

The WAVE PORTAL will automatically populate a list of all commissioned system hardware by serial number that it finds associated with a site. You can then drag each device onto the floorplan where it is located.



Figure 36: WAVE Portal Survey Editor

The system will auto-assign a number to each CU that it finds, according to the numbering conventions shown below. You can change the name of a CU at any time, but not the CU number.

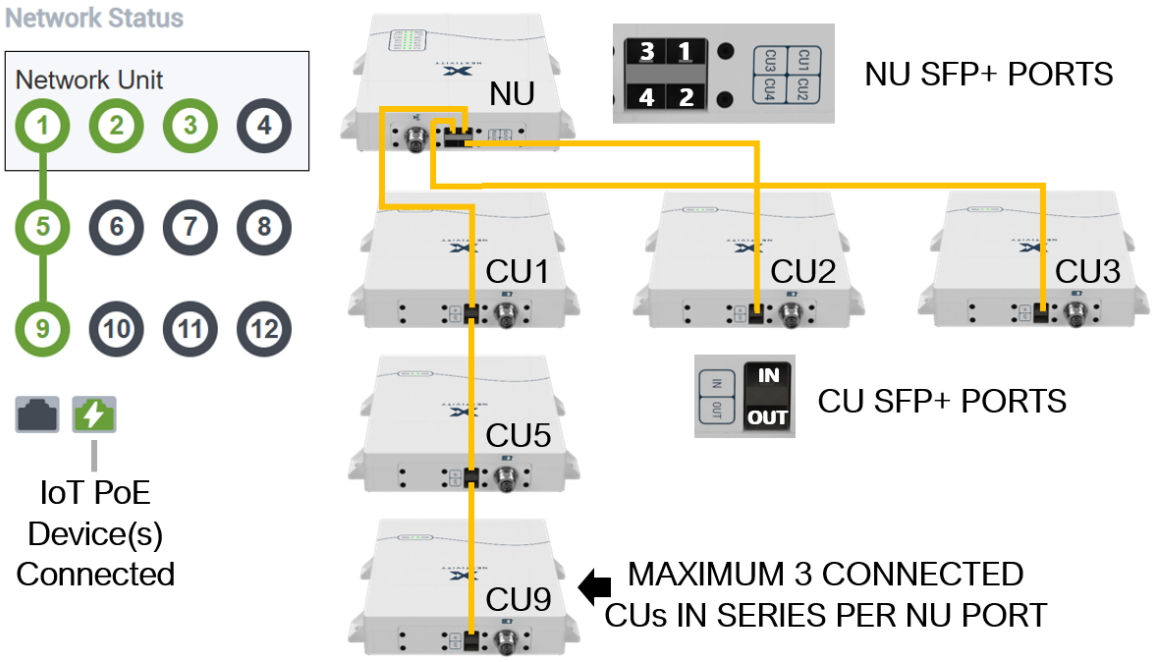

Figure 37: WAVE Portal CU Numbering

5.6 Step 6 – Evaluate the Installation

This step involves these activities in greater detail:

1. Resolve any alarms
3. Use WAVE Portal Guidance to improve performance if indicated
4. Evaluate coverage and performance
5. Perform additional troubleshooting steps if needed

Alarms

You can select the alarm from the Alarm History window on the Wave Portal for a suggested solution. You can also match up the NU or CU LED display with the information in Appendix F.

Guidance

The WAVE Portal includes triangular Guidance Icons on the Radio Data pages. These icons are not alarms. They are hints for better performance using live data from your system. Select the icon for helpful guidance suggestions to improve performance.

Coverage/Service Testing

Perform a coverage survey to evaluate improved performance throughout the coverage area using COMPASS XR and make test phone calls (Wi-Fi Calling must be disabled) for the operator or private network that the system is boosting.

General Tips

Most problems relate to software that needs updating, a cable problem, or a poorly placed or aimed donor antenna.

- Donor Antenna placement and aiming are important to maximize service quality. Be patient if a site is a bit difficult to aim. A donor antenna may be connected to a Nextivity COMPASS XR to evaluate candidate cell site directions or use a spectrum analyzer on max-hold for the frequencies you intend to relay. Then retest each candidate direction using system reported SINR (fine-tuning of the final donor antenna direction). The greater the SINR, the better the data rates and phone “bars” that will be displayed.
- If a unit such as a CU is having trouble connecting to an NU or NU to PU, check the cable connections. This is the most common install alarm to resolve. Connectors might be dirty or not well connected to the cable, or an incorrect connector may have been used. Re-insert the cable into its port a few times to clean contacts or re-terminate the cable. Check optical modules, cables and connectors to ensure they are all the same mode (MMF/SMF). Check for routing errors such as category cables run along AC power cables, or cables that have kinks or bends that are out of spec with the cable bend-radius. Optical cables can be sensitive to micro-fractures if kinked.

- If a unit does not appear to behave properly, use the WAVE Field Tool to reload all software components. Note that the WAVE Portal can update most but not all software components, and that it cannot reload existing software (technically a software factory reset).

Appendix A | WAVE Portal (NMS) Firewall Settings

For remote monitoring, maintenance and diagnostics please connect the WAN port on the PU to the internet using the firewall settings as indicated in the link below, from the Nextivity Partner Portal.

Learn More about LAN Firewall Settings

Once the system is powered ON, the NU will **automatically reach out via the PU** to the **WAVE Portal** in the cloud and the WAN LED should be solid green or blinking green to indicate management traffic.

If your system is visible on the **NEW SYSTEMS** page, select it to begin commissioning. Note that the status icon must be green to indicate that the system is online. Otherwise, if the system does not appear or is shown in a gray color, troubleshoot the portal connection at the PU and then retry. You may use the **Connectivity Test** within the **WAVE Field Tool (WFT)** program on a Windows 10 or later PC to emulate the QUATRA 100M to test your firewall.

WAVE Field Tool

Appendix B | Smart Antennas and Modules

The **QUATRA 100M** system supports "Do More with DAS" **Nextivity Smart Antennas**, **and Nextivity Smart Antenna Modules**. These connect wireless IoT devices over **Bluetooth** and **Zigbee** within the **QUATRA 100M cellular coverage area**, controlled by a Nextivity programmed Edge Server that is part of the site network. Examples are Panic buttons, sensors, and security devices.

Contact your point of sale or nextivityinc.com for more information.

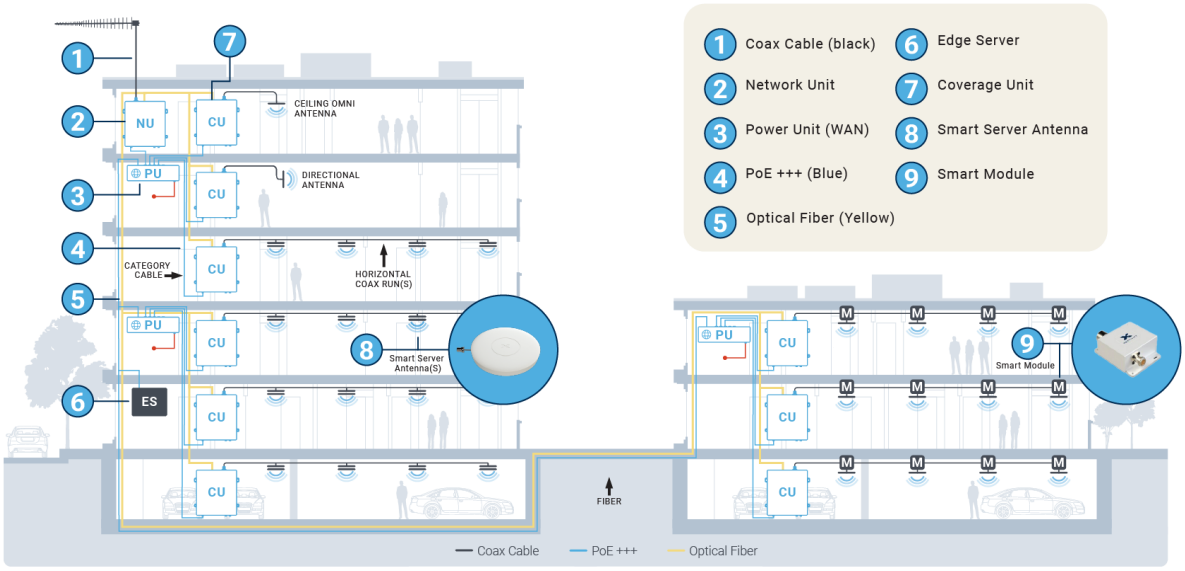

Figure 38: Integration of Nextivity Smart Antennas and Smart Modules within the QUATRA 100M system, enabling wireless IoT device connectivity via Bluetooth and Zigbee, managed by the site's Edge Server.

Appendix C | Ethernet-connected IoT Devices

This QUATRA 100M NU and CU have two additional RJ45 ports to connect PoE-powered IoT devices that are local to the NU or CU and connected to the site network. Examples of such devices are:

- A PoE security camera.
- A PoE phone or intercom device.
- A PoE temperature sensor.
- A PoE proximity sensor to detect human presence.

The system effectively bridges the Ethernet frames from these devices to the PU WAN port and management of the devices is via the site network.

The total **combined** power consumption of both local PoE ports **should not exceed 15.4 Watts**.

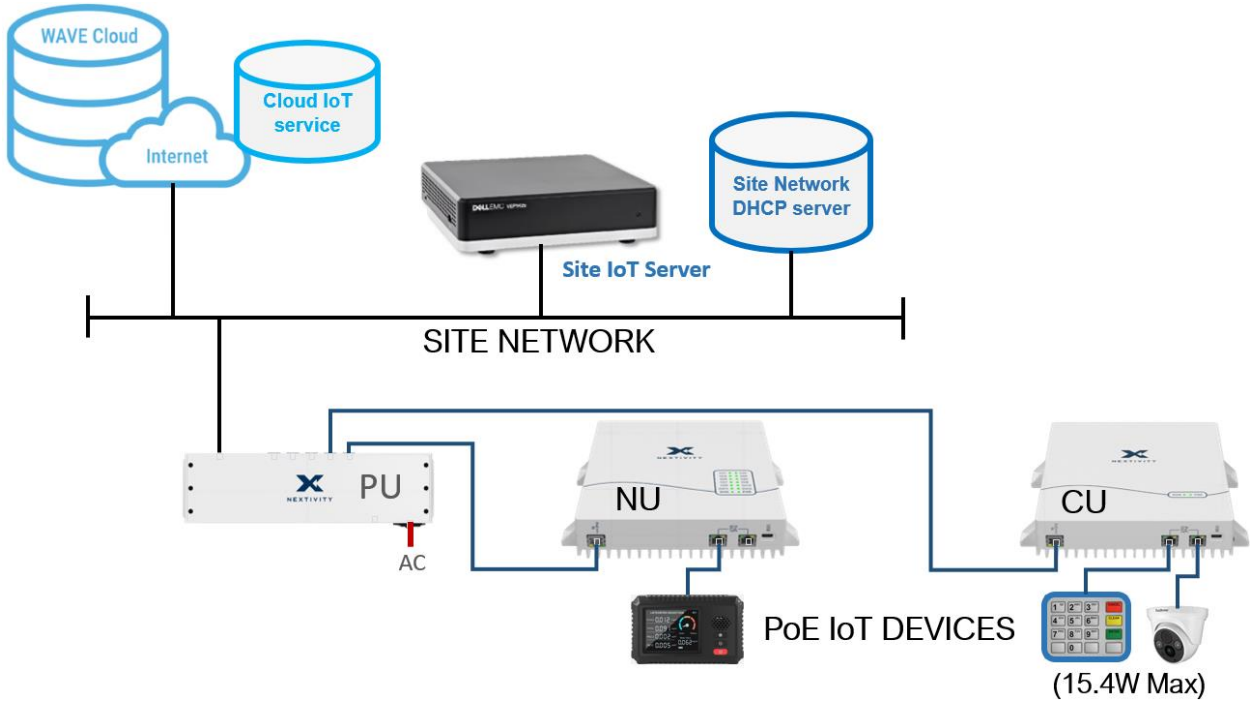

Figure 39: Example of Ethernet-connected IoT devices powered via PoE from CUs or NUs, integrated into the site network with DHCP and Cloud IoT services.

Appendix D | Nextivity Tools

Nextivity offers a variety of tools and resources to support the planning, installation, commissioning, and maintenance of **CEL-FI QUATRA 100M** systems.

For more information, see nextivityinc.com or contact your point of sale.

Quick Reference – Available Tools

Online system design tools – including the Nextivity BOM Estimator for planning materials and components.

- **WAVE Portal** – browser-based remote Network Management System (NMS).
- **COMPASS XR** – portable scanner for donor antenna aiming, surveys, and coverage testing.
- **WAVE Pro App** – (iOS/Android) mobile interface for COMPASS XR control and data collection.
- **WAVE Field Tool (WFT)** – Windows-based program for local system management and diagnostics.

Detailed Tool Descriptions

Nextivity BOM Estimator

An online tool where you enter information about the size and internal construction of a building to generate a list of required parts.

Outputs include:

- Nextivity hardware
- Antennas
- Coaxial cable
- Category cable
- Optical cable

Key Benefits:

- Quickly generates installation part lists before or after a site survey.
- Improves accuracy when precise building data is entered.
- Available exclusively to trained Nextivity installers in the Partner Portal.

COMPASS XR and WAVE PRO App

COMPASS XR is a hand-held, battery-operated device designed to simplify the installation of Nextivity systems.

WAVE Pro App (iOS/Android) connects to and controls COMPASS XR over Bluetooth.

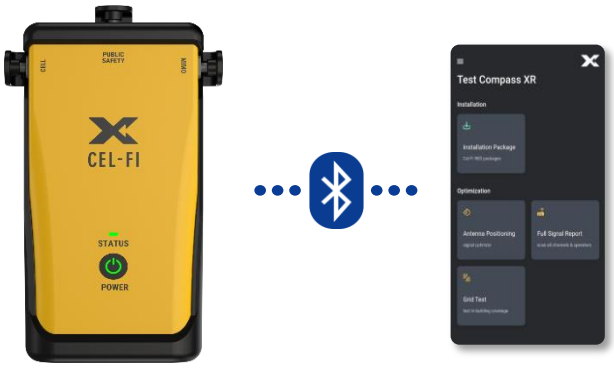

Figure 40: COMPASS XR and the WAVE PRO App

Key features include:

- Donor Antenna Aiming
- Full Cellular band scans for 4G and 5G
- Grid Testing (walk testing) for coverage evaluation

WAVE Field Tool (WFT)

A Windows 10+ program for local system management and advanced troubleshooting.

Key Functions:

- Cloud connection test (NU to WAVE Portal)
- SIM card maintenance (QUATRA 4000/EVO)
- Factory reset
- Cloud reset
- Full system software update or reload

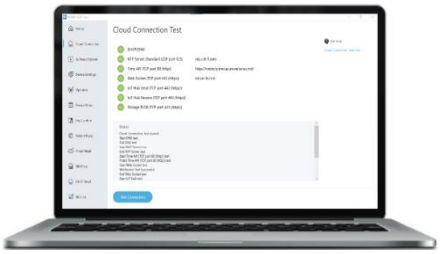

More Information

For additional resources, guides, and software downloads, visit nextivityinc.com or contact your point of sale.

Appendix E | Fiber Optic Cables

Using Pre-made Cables and Existing Dark Fiber

Pre-made fiber-optic cables can be purchased in a variety of lengths. For many installations, having a stock of pre-made cables of varying lengths on-hand may be sufficient, for instance just using 10m, 25m, 50m, 75m, 100m pre-made duplex fiber optic cables can be cost effective as an installation strategy.

Likewise in some modern buildings there may be substantial pre-installed dark fiber and fiber optic patch panels placed strategically around the building, in which case you may be able to piggy-back onto that infrastructure and deploy pre-made jumper fiber optic cables to connect the NU / CU to the nearest patch panel.

Field Terminating and Splicing Fiber Optic Cables

Raw cable spools may be purchased and the cable field-terminated or spliced. Contact your point of sale for the cables, terminators and tools that they carry.

Below is general information on the process you are likely to follow for field-terminated fiber optic cables and if required, optical fiber splicing.

Before doing your first installation you should practice, and maybe also enroll on a 3rd party training course to learn how to do it beforehand.

Tools & Equipment You'll Need:

- ✔ Fiber optic cable stripper
- ✔ Cleaver
- ✔ Connector kits (SC, LC, ST, etc.)
- ✔ Polishing tools (for manual terminations)
- ✔ Cleaning supplies (isopropyl alcohol, lint-free wipes)
- ✔ VFL (Visual Fault Locator) or OTDR (for testing)
- ✔ Fusion splicer or mechanical splice kit (if you are going to splice cables)

Quick Terminating with Pre-polished/Field-Installable Connectors

This is the process that you are most likely to use.

Steps:

1. Strip and cleave the fiber.
2. Insert into the pre-polished connector.
3. Use a visual fault locator to check alignment.
4. Lock the fiber into place.

Epoxy and Polish Termination

Use this process when custom connectors or permanent terminations are required.

Steps:

1. Inject epoxy into the connector ferrule.
2. Insert the stripped and cleaned fiber.
3. Cure the epoxy (air dry or oven).
4. Cleave excess fiber and polish the tip using polishing films.
5. Inspect with a microscope.

Fusion Splicing

In most installations, splicing of fiber optic cables is unlikely. If splicing is required, Fusion Splicing is generally used when low signal loss and long-term reliability are essential over long cable lengths (e.g., backbone networks), so this method is usually unnecessary when installing QUATRA 100M systems where cable length is in the tens or hundreds of meters.

Steps:

1. Strip the fiber jacket and buffer coating using a stripper.
2. Clean the bare fiber with isopropyl alcohol.
3. Cleave the fiber with a precision cleaver to get a clean, 90° cut.
4. Align the two fiber ends in the fusion splicer.
5. Let the splicer arc-fuse the fibers together.
6. Apply a heat-shrink sleeve over the splice and use a heat oven to protect it.

Mechanical Splicing

This method is much faster and usually adequate for QUATRA 100M installations, should you need to use it.

Steps:

1. Prepare and cleave both fibers as above.
2. Insert the fiber ends into a mechanical splice holder (usually gel or index-matching material inside).
3. Align manually and secure.
4. Test the splice with a VFL.

Testing & Verification with an Optical Power Meter or OTDR to check signal loss.

Inspect all connectors with a fiber scope.

Ensure all terminations are clean and free of dust—even a tiny speck can degrade performance.

- **Tips:**
  - **Always wear safety glasses**—fiber shards are dangerous.
  - **Keep your work area clean** to avoid contamination.
  - Never bend fiber cables **beyond their minimum bend radius**.

Appendix F | LED Indications

This section describes the LED states on the PU, NU and CU.

PU LEDs

The PU has one main status LED to indicate power, and RJ45 port power and status LEDs.

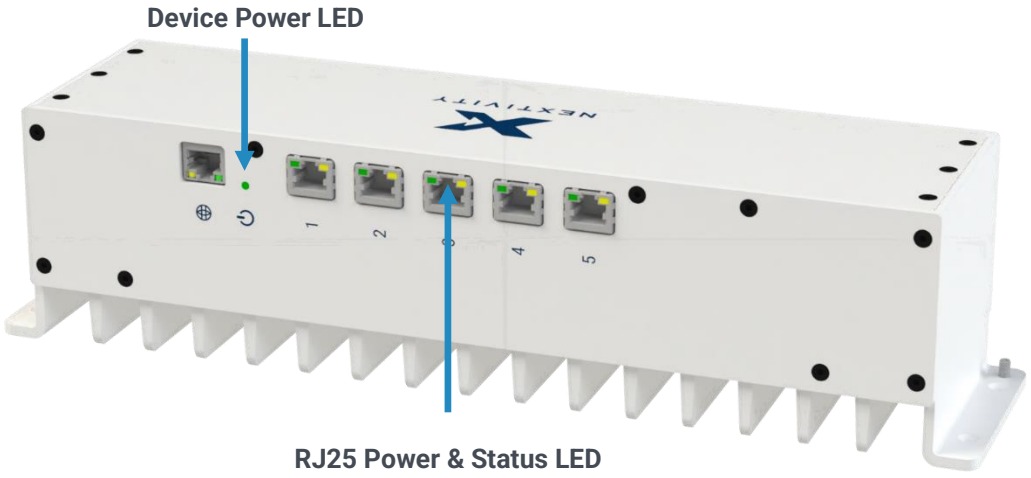

Figure 41: Power Unit (PU) front panel showing main status LED (left) and RJ45 port power/status LEDs (1–5).

NU LEDs

The QUATRA 100M Network Unit has 14 Status Indicator LEDs on the front of the unit:

- 12 for Coverage Units, labeled **CU1 through CU12**.
- One for connectivity into the site network and the Nextivity Cloud, labeled **WAN**
- One for power and status, labeled **PWR**

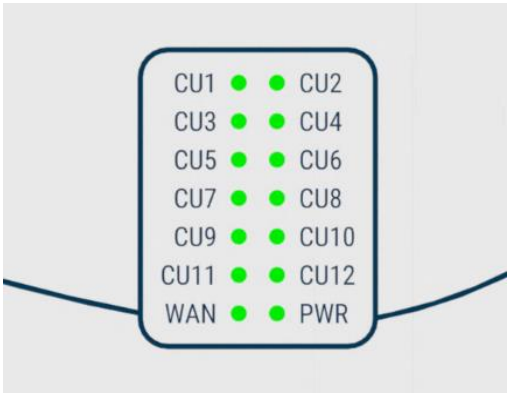

The **PWR LED** can be off, orange, red or green. The **WAN** and **CU** status indicators can either be off or green.

When you first power up the system, you will see various combinations of red, orange and green LEDs displayed by the **PWR LED**.

Once the system completes the normal boot-up sequence:

1. **PWR** should display solid green, indicating you are successfully relaying a signal.
2. **WAN** should display green, blinking with communication activity to the site network.
3. **CUx** LEDs should be solid green, for all CUs that are connected to the system and communicating with the NU.

- If a device **PWR LED** is not lit, then it indicates no power to the device. Check the power source (outlet) and AC cable, or the category cable supplying the device with power.
- If there is an error, the **PWR LED** will be red and either solid or flashing. A solid red PWR LED indicates either a hardware error, or a fatal software or configuration error.
- If you see a solid red **PWR LED**, then you should use the Nextivity Wave Field Tool and a USB-C cable to connect the unit to a Microsoft Windows PC and update the software. If the PWR LED is still solid red after the update, contact Nextivity support.

All other error conditions are indicated by a flashing red PWR LED. To determine which error is indicated, look at pattern of the flashing LED.

There will be a sequence where:

1. The LED **flashes red once per second** some number of times
2. Then stays **off for 4 seconds**
3. Then **flashes red again** the same number of times
4. Then stays **off for 4 seconds**
5. Etc.

The number of flashes displayed for each error condition is in the table below:

NU PWR LED Flash Count	Error Condition
1	No valid channels were found or there is an insufficient donor signal.
2	The donor signal is too strong. In this case, add attenuation to the donor port.
3	The NU is overheating. Ensure that the NU installation environment matches the operating temperature conditions specified in the datasheet.
4	The device has been disabled by over-the-air means. This feature is only implemented in certain markets. In most markets this cannot happen.
5	The device has determined that it moved from its original location. Move it back to the original location. This feature is only implemented in certain markets.
6	The device has determined that it moved from its original location. Re-commission it at the new location.
7	The Self-test failed. Try to fix by power cycling the unit. If the error persists, contact Nextivity Support.
10	An incompatible CU is connected – likely one that supports different bands than the NU. Disconnect that CU and replace it with one that supports the same bands as the NU.

CU LEDs

The QUATRA 100M Coverage Unit has 2 Status Indicator LEDs on the front of the unit:

- One for power and status, labeled PWR
- The other for connectivity into the site network for local Ethernet-connected IoT devices, labeled WAN



The **PWR LED** can be off, orange, red or green. The **WAN** and **CU** status indicators can either be off or green.

When you first power up the system, you will see various combinations of red, orange and green LEDs displayed by the **PWR** LED.

Once the system completes the normal boot-up sequence:

1. **PWR** flashing green indicates the link to the NU is not yet up.
2. **PWR** solid green indicates the link to the NU is up.
3. **WAN** should either display green, blinking with communication activity to the site network, or be off, if the PoE+++ category cable powering the CU is not providing a network connection.

If a device **PWR** LED is not lit, then it indicates no power to the device. Check the power source (outlet) and AC cable, or the category cable supplying the device with power.

If there is an error, the **PWR** LED will be red and either solid or flashing. A solid red PWR LED indicates either a hardware error, or a fatal software or configuration error.

If you see a solid red **PWR** LED, then you should use the Nextivity Wave Field Tool and a USB-C cable to connect the unit to a Microsoft Windows PC and update the software. If the PWR LED is still solid red after the update, contact Nextivity support.

All other error conditions are indicated by a flashing red **PWR** LED. To determine which error is indicated, look at pattern of the flashing LED.

There will be a sequence where:

1. The LED flashes red once per second some number of times
2. Then stays off for 4 seconds
3. Then flashes red again the same number of times
4. Then stays off for 4 seconds
5. Etc.

The number of flashes displayed for each error condition is in the table below:

NU PWR LED Flash Count	Error Condition
3	The CU is overheating. Ensure that the NU installation environment matches the operating temperature conditions specified in the datasheet.
9	The CU has lost contact with one or more smart server antennas or smart server antenna modules. Check the server-side cabling to the CU and ensure the power injectors are correctly connected.

Appendix G | WAVE Portal

The portal has many valuable features. Once a system is online, check the **Systems** page for **Active Alarms**, or **Alarm Notification History** in the event of recurring alarms that may not be currently active.

CEL-FI systems support a variety of standard alarm conditions. **Policies** are your own account settings for alarms, alarm severities, and whether you want them displayed on the portal (console) or emailed or texted to individuals or groups. Each new user (company) is given a "Default Policy" with the basic alarms already in it. You may edit this policy as you please or create new policies. For example, you may want different policies for different regions. It is the responsibility of policy holders to add new alarms that may be introduced with new products. It is recommended that all your policies have all possible alarms, so they can properly report alarms for all products where alarm options may differ.

Alarms for a given system are displayed on its **Systems** page. If you would like a list of all alarms across all the systems your company has installed, refer to the **Notifications** tab.

For information on how to resolve any alarm, simply select the alarm notification in the **Alarm Notification History** window and help text will be displayed.

Below is a non-exhaustive list of basic alarm categories.

Troubleshooting (WAVE Portal Alarm Notifications)

Alarm	Description
NU Hardware Error	Power cycle the NU and check for software updates. If the problem persists, return NU for service.
Insufficient Donor Signal	Relocate the NU where a stronger signal exists or use an external antenna for the NU. If using a small cell, verify that the small cell can process calls and check the connections to the NU. Power cycle the NU.
CU Hardware Error	Troubleshoot any NU error first and check for software updates. Test CU by plugging it into the NU and PU with a short test cable.
CU Link Lost	The cable link between NU and CU behaves unreliably or reports an error. Ensure the CU fiber optic cable is not damaged, and its connectors are securely plugged in on both ends. Also ensure the category cable run length form the PU has not exceeded the maximum run length for the cable rating.
CU Shutdown from Portal	One or more CUs have been shut down from the Portal.
Donor Signal Too Strong	Add attenuation on the donor antenna cable.
NU is Overheating	Ensure the NU cooling fins are not blocked or move the NU to a cooler area.

Alarm	Description
CU is Overheating	Ensure the CU cooling fins are not blocked or move the CU to a cooler location.
Disabled by Operator/Vendor	The mobile network operator has disabled your system. This feature does not operate in most markets – if you see it you are operating on a market where the feature is used, and you should contact your supplier of the system hardware.
Location Lock	Your system has been moved from its original location. Return the system to its original location or recommission at the new location.
Self-Test Failed	Power cycle the unit and check for software updates. If the problem persists, return the unit for service.
Small Cell Not Detected	NU Mode is set to a small cell. Verify that the small cell is connected and operational or set NU Mode to Internal or External Antenna if no Small Cell is used.
Small Cell Detected	Small Cell Detected, but NU is not set to Small Cell. Use the WAVE Portal to select NU Mode to Small Cell.

WAVE Portal Guidance Alerts

The portal has many useful features for evaluating service or diagnosing issues, all without the need to visit a Site.

If you:

- Need help on a portal topic, select the **(?) Help icon for more information**.
- To see how RF service parameters have been behaving over time, select the blue Chart icon next to the KPI for a chart of the data over time.
- See a guidance alert icon, you can select it to bring up helpful advice on how to improve performance.

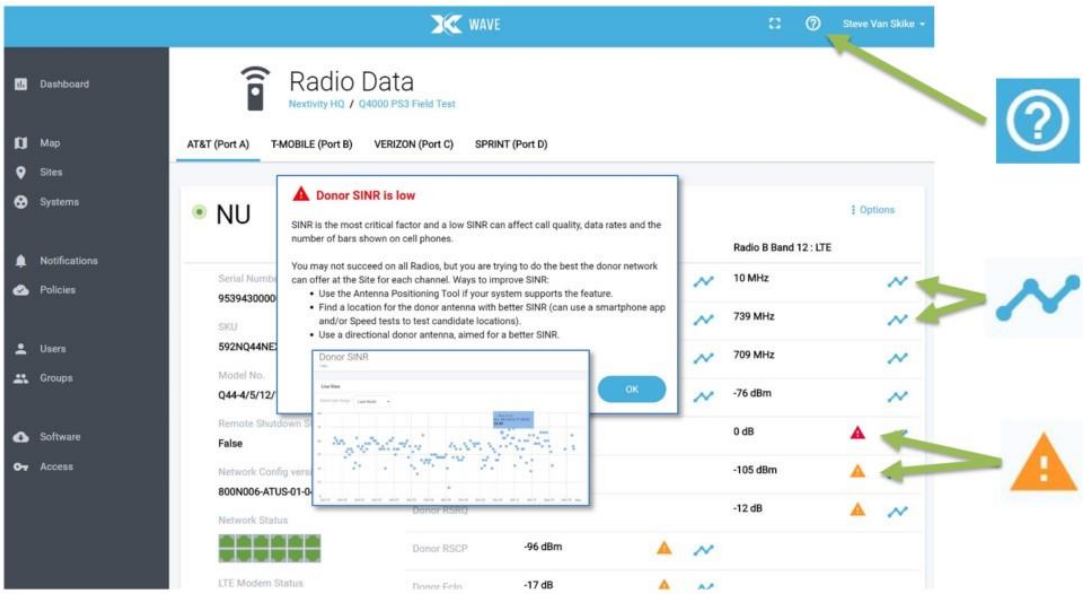

Figure 42: WAVE Portal interface showing key support tools—Help icon (?), KPI chart icon, and guidance alert icon—providing remote assistance for evaluating service and improving system performance.

Nextivity University lessons for installation and maintenance have **extensive information** on using the Wave Portal.

Appendix H | Useful Toolbox Items for Installs

We recommend that you bring the following items to every installation. Because every site is different, and you often won't know what you need until you begin the installation.

ITEM	WHY YOU MAY NEED IT
Short (<10m) Cat6 Ethernet cables (machine made)	If a system is not powering up over PoE, or there is a connectivity problem to the site network, try using a machine-made NU or CU cable to test the connection.
Attenuators (10 and 20 dB values)	Use to attenuate an extremely strong donor signal, which might cause the signals to not be relayed at all or have poor SINR.
2-Way and 3-Way splitters, 4.3-10(f) connectors	Splitting donor signals to multiple NUs if needed.
Various short 4.3-10 to 4.3-10 terminated coaxial cables.	Jumper cables for connecting thick coax to ports, or for various testing scenarios.
Various cable type adapters solid or short jumper cables (SMA, N, 4.3-10)	It can be useful to have some adapters between SMA, N and 4.3-10 type coaxial cable terminations, to connect to cables or antennas you might encounter with SMA or N connectors.
Matched pairs of SFP+ modules	10Gbps SFP+ modules, one pair per fiber link between NU and CU or between two CUs. Need MMF or SMF type, according to what fiber is used in an installation.
Pre-made duplex fiber optic cables	A selection of known good pre-made / machine made fiber optic cables of various lengths, and optical fiber types (SMF or MMF) to match SFP+ connectors. These are useful for testing the link between an NU and CU, or between CUs, if a CU fails to come up.
Nextivity LTEM-EU industrial IoT router	Industrial IoT router/4G modem supplied by Nextivity, for locations where there is no access to the site network for an Internet connection to connect the system to the WAVE Portal, for remote management.
10dB coupler and 4.3-10(m) to SMA(m) cable	To connect the Nextivity LTEM-EU industrial IoT router to a donor antenna cable, to feed it a 4G signal, where it finds no signal using the supplied antenna.
Appropriately rated antennas	Temporary or permanent donor and server antennas you might need to use for testing purposes during installation, rated for use in the n77 or n78 bands. Examples are Nextivity LPDA-R outdoor antenna and A21-V44-600 indoor whip antenna.

Specifications and Dimensions

For details, please refer to the datasheet, available at nextivityinc.com.

Trademarks

CEL-FI, IntelliBoost, QUATRA, and Nextivity are trademarks of Nextivity, Inc.

Warranty & Limitation of Liability

Nextivity Inc. provides a limited warranty for its products.

For details, please refer to https://nextivityinc.com/warranty

In no event shall Nextivity, nor its directors, employees, agents, suppliers or End Users, be liable under contract, tort, strict liability, negligence or any other legal or equitable theory with respect to the Products or any other subject matter of this Agreement (i) for any lost profit, cost of procurement of substitute goods or services, or special, indirect, incidental, punitive, or consequential damages of any kind whatsoever or (ii) for any direct damages in excess of (in the aggregate) the fees actually received by Nextivity from End User with respect to the Products actually purchased and paid for.

Regulatory

EU RED Certified (EMEA/APAC Version)

The CEL-FI QUATRA 100M has EU RED certification for all supported bands.

For further information and declarations of conformity consult https://nextivityinc.com/DoC/

FCC Certified (AMER Versions)

The CEL-FI QUATRA 100M is FCC certified based on the supported bands by model number.

For further information consult https://nextivityinc.com/DoC/ or see the printed in-box legal leaflet.

Note that a Retransmission Agreement is required by the operator that the unit is configured to serve.