peplink

BR1 Mini RedCap Family

5G for the Long Run



POWER	CELLULAR ANTENNAS	OPERATING RANGE	CERTIFICATIONS
4–6 W	2	–40° to 149°F –40° to 65°C	C1D2 UL TAA

5G Sized for the Job

POS terminals, meters, and telematics do not need raw speed. They need a connection that lasts the life of the installation. 5G RedCap (Reduced Capability) is the 5G built for IoT, and the BR1 Mini RedCap brings it to every site.

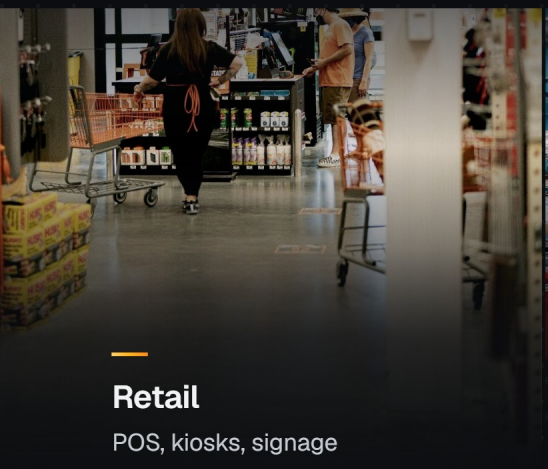

Retail

POS, kiosks, signage



Industrial and utility

Meters, PLCs, telemetry

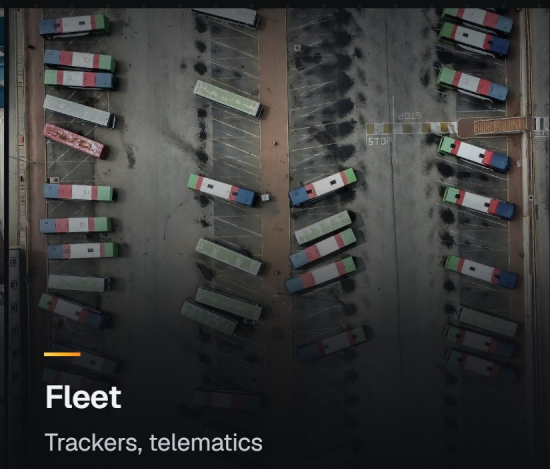

Fleet

Trackers, telematics

WORKS AT EVERY SITE

5G Where It Is Live
LTE Until It Arrives

Where 5G is live, it runs on 5G. Where it is not, it runs on LTE and moves to 5G when coverage arrives.

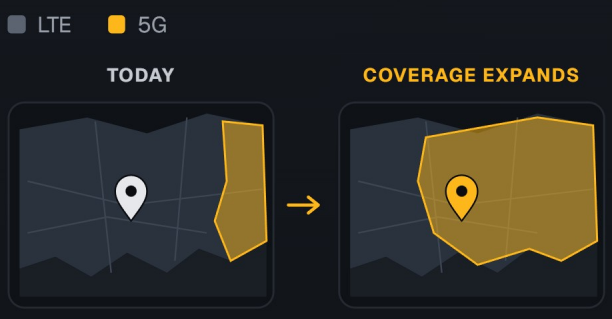

Same site. Same router.

CRITICAL TRAFFIC FIRST

Advanced 5G Unlocked
Application-Based Slicing

A direct connection to the 5G core is the foundation for advanced 5G services. With network slicing, chosen apps such as point-of-sale get a dedicated slice, while video and web stay on the default network.

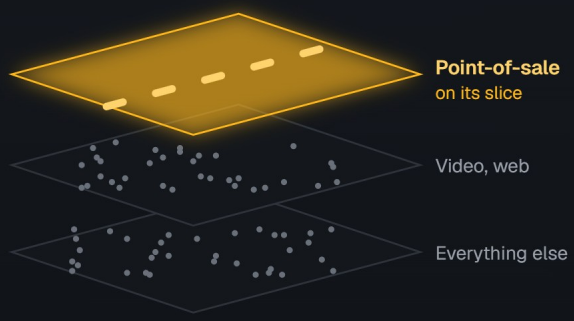

5G Without Starting Over

IoT sites are built to run for a decade. Moving one from LTE to 5G keeps the antennas, mounts and power already there, so you upgrade on your own schedule and protect the investment already in every site.

KEEPS THE ANTENNAS

2 not 4

The same count as an LTE router

The antennas and cable runs already on site stay where they are, and only the router is swapped.

Applies where the existing antenna covers your 5G bands.





KEEPS THE MOUNTS

Same size

The same size as the BR1 Mini LTE, so existing brackets, DIN rail kits and cabinet space stay in use.

KEEPS THE POWER SYSTEM

4-6 W typical

Runs on AC, DC or PoE, so it works with the power already in place.

- ✓ No new supply, battery or solar panel needed
- ✓ Suited to sealed enclosures
- ✓ Runs on the site's existing backup power

Every Site One Screen

Every router reports to InControl 2, so each site's link, alerts, and history sit on one screen.

InControl 2 · Group Level › North District › Dashboard

Dashboard | Reports | SpeedFusion VPN | Wi-Fi AP | Network Settings 01 | Clients | Settings

North District ☆

Online	Offline	Total	Clients
1,248 device(s)	0 device(s)	1,248 device(s)	1,302 online

Riverside Treatment Plant — Illustration



Needs attention 02

- **Riverside_PumpHouse_2** — SIM A WAN health check failed
- **Pump_Station_114** — Bandwidth allowance reached 90%

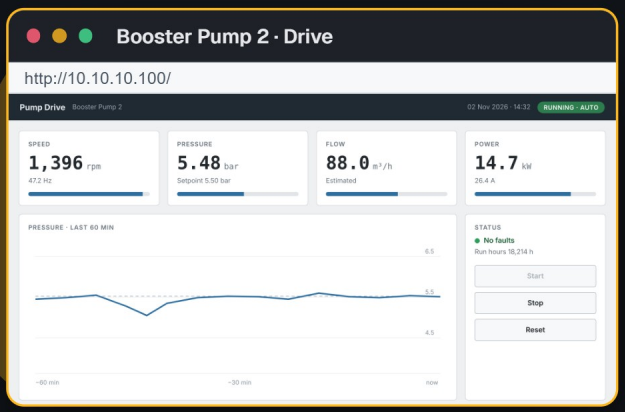

Devices 1,248 device(s)

Status	Device Name	Product	Uptime	WAN	Usage	CPU
■	☆ Riverside_PumpHouse_2	BR1 Mini M2M RedCap	31 days	5G (Peplink eSIM)	0.2 Mbps	3%
■	☆ Riverside_Intake_1	BR1 Mini RedCap	31 days	5G	0.1 Mbps	2%
■	☆ Pump_Station_114	BR1 Mini RedCap	54 days	5G	0.4 Mbps	4%

01 Configure Once for All
Change every site in one step from InControl 2.

02 Alerts on Problem Sites
Act on a failing link before customers notice.

03 InTouch: Reach Any Device
Open a PLC, camera or switch behind the router, with no VPN.

Pooled Data No Truck Rolls

Every router has a Peplink eSIM on one shared data plan, so new sites go live sooner and outages need no site visit.

ONE POOL FOR THE FLEET

Assign Data to Every Site in One Step



1 GB assigned to each site

Tops up automatically below 500 MB

SAVES THE INSTALLER VISIT

No On-Site Setup

Buy and assign eSIM data
data ready before it ships

Power on at the site
online at once on the Peplink eSIM

Configure everything remotely
network settings and carrier plan

Carrier plan in service
bootstrapped, over the Peplink eSIM

Sites go live with no one sent out to set anything up.

SAVES THE EMERGENCY TRUCK ROLL

Keep Operating Through Outages

Primary carrier goes down
the Peplink eSIM is standing by

Switches to the Peplink eSIM
automatically; the site stays online

Business keeps operating
up to 2 days, no truck roll

Outage fixed, SIM back online
Peplink eSIM returns to standby

The business carries on, and no one is sent to site.

Wired · Wi-Fi · Serial All 5G

Choose the model by what the site needs to connect. All three share the same power supply, cellular antennas, and management.



BR1 Mini RedCap

MAX-BR1-MINI-5GRC-P-T-M-PRM



BR1 Mini RedCap

MAX-BR1-MINI-5GRC-P-T-PRM



BR1 Mini M2M RedCap

MAX-BR1-MINI-M2M-5GRC-P-T-PRM

5G REDCAP	●	●	●
WI-FI 5	—	●	●
RS-232 / RS-485	—	—	●
GPS	●	●	●
ETHERNET	3x GE	3x GE	2x GE

BR1 Mini RedCap

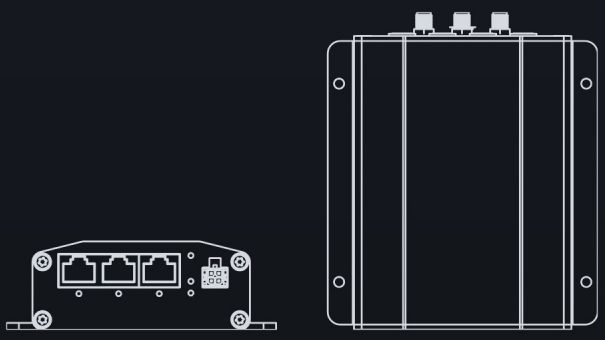

SIZE (W × D × H)
4.2 × 5.0 × 1.4 in
107 × 125.7 × 35 mm

WEIGHT
0.95 lb (430 g)

BR1 Mini M2M RedCap

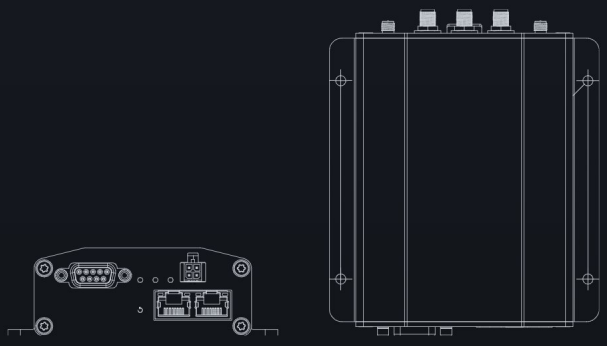

SIZE (W × D × H)
4.2 × 5.1 × 1.4 in
107 × 129.5 × 35 mm

WEIGHT
1 lb (455 g)

OPERATING
–40° to 149°F (–40° to 65°C)

POWER INPUT
10–30 V DC, 802.3at PoE in

INTERFACE
Ignition sensing, GPIO
RS-232 / RS-485 serial (M2M only)

SPECIFICATIONS

BR1 Mini RedCap

MAX-BR1-MINI-5GRC-P-T-M-PRM





CELLULAR

Modem	1x 5G RedCap Modem with Redundant SIM Slots
Cellular Data Rate[2]	5G RedCap: 223 Mbps / 123 Mbps LTE CAT-4: 200 Mbps / 105 Mbps
SIM Options	Nano-SIM (4FF) Peplink eSIM BYO eSIM (4 profiles)
Antenna Connectors	2x SMA Cellular Antenna Connectors 1x SMA GPS Antenna Connector

INTERFACES

WAN	1x 10/100/1000M Ethernet[1]
LAN	2x 10/100/1000M Ethernet
I/O	GPIO Ignition sensing

PERFORMANCE

Router Throughput	300 Mbps
Recommended Users	1–60
Certifications	FCC, CE, RoHS UL 121201 (Class I, Division 2) EN 61373 (shock and vibration resistance) EN 50155 (railway), EN 61000 (EMC)

SPEEDFUSION™

Technologies	Hot Failover[1], Smoothing[1], Bandwidth Bonding[1], SpeedFusion Boost[1]
VPN Peers	2 / 5[1]
VPN Throughput	No encryption: 80 Mbps 256-bit AES: 60 Mbps

POWER

Power Input	AC Adapter: AC Input 100–240 V / DC Output 12 V 4-Pin Micro-Fit Connector: 10–30 V DC Power over Ethernet 802.3at
Power Consumption	5 W typical / 10 W max

PHYSICAL & ENVIRONMENTAL

Dimensions	5.0 x 4.2 x 1.4 inches 125.7 x 107 x 35 mm
Weight	0.95 pounds / 430 grams
Operating Temperature	–40° to 149°F / –40° to 65°C
Humidity	15–95% (non-condensing)

PACKAGE & WARRANTY

Package Content	1x BR1 Mini RedCap 2x LTE/5G Antennas (ACW-235) 1x GPS Active Antenna (ACW-232) 1x 12 V DC, 2 A 4-Pin Power Supply (ACW-632)
Warranty	1-Year Limited Warranty

NOTES

[1] Requires a PrimeCare subscription, complimentary for the first year, or the feature pack add-on license (MAX-BR1-MINI-LC-FP).
[2] Data rates are theoretical maximums.
Specifications are subject to change without notice.

SPECIFICATIONS

BR1 Mini RedCap

MAX-BR1-MINI-5GRC-P-T-PRM





CELLULAR

Modem	1x 5G RedCap Modem with Redundant SIM Slots
Cellular Data Rate[2]	5G RedCap: 223 Mbps / 123 Mbps LTE CAT-4: 200 Mbps / 105 Mbps
SIM Options	Nano-SIM (4FF) Peplink eSIM BYO eSIM (4 profiles)
Antenna Connectors	2x SMA Cellular Antenna Connectors 2x RP-SMA Wi-Fi Antenna Connectors 1x SMA GPS Antenna Connector

INTERFACES

WAN	1x 10/100/1000M Ethernet[1]
LAN	2x 10/100/1000M Ethernet
Wi-Fi	Simultaneous Dual-Band (2.4 GHz / 5 GHz) Wi-Fi 5, 2x2 MIMO Wi-Fi WAN[1] and/or AP
I/O	GPIO Ignition sensing

PERFORMANCE

Router Throughput	300 Mbps
Recommended Users	1–60
Certifications	FCC, CE, RoHS UL 121201 (Class I, Division 2) EN 61373 (shock and vibration resistance) EN 50155 (railway), EN 61000 (EMC)

SPEEDFUSION™

Technologies	Hot Failover[1], Smoothing[1], Bandwidth Bonding[1], SpeedFusion Boost[1]
VPN Peers	2 / 5[1]
VPN Throughput	No encryption: 80 Mbps 256-bit AES: 60 Mbps

POWER

Power Input	AC Adapter: AC Input 100–240 V / DC Output 12 V 4-Pin Micro-Fit Connector: 10–30 V DC Power over Ethernet 802.3at
Power Consumption	5 W typical / 10 W max

PHYSICAL & ENVIRONMENTAL

Dimensions	5.0 x 4.2 x 1.4 inches 125.7 x 107 x 35 mm
Weight	0.95 pounds / 430 grams
Operating Temperature	–40° to 149°F / –40° to 65°C
Humidity	15–95% (non-condensing)

PACKAGE & WARRANTY

Package Content	1x BR1 Mini RedCap 2x LTE/5G Antennas (ACW-235) 2x Dual-Band Wi-Fi Antennas (ACW-342) 1x GPS Active Antenna (ACW-232) 1x 12 V DC, 2 A 4-Pin Power Supply (ACW-632)
Warranty	1-Year Limited Warranty

NOTES

[1] Requires a PrimeCare subscription, complimentary for the first year, or the feature pack add-on license (MAX-BR1-MINI-LC-FP).
[2] Data rates are theoretical maximums.
Specifications are subject to change without notice.

SPECIFICATIONS

BR1 Mini M2M RedCap

MAX-BR1-MINI-M2M-5GRC-P-T-PRM





CELLULAR

Modem	1x 5G RedCap Modem with Redundant SIM Slots
Cellular Data Rate[2]	5G RedCap: 223 Mbps / 123 Mbps LTE CAT-4: 200 Mbps / 105 Mbps
SIM Options	Nano-SIM (4FF) Peplink eSIM BYO eSIM (4 profiles)
Antenna Connectors	2x SMA Cellular Antenna Connectors 2x RP-SMA Wi-Fi Antenna Connectors 1x SMA GPS Antenna Connector

INTERFACES

WAN	1x 10/100/1000M Ethernet[1]
LAN	1x 10/100/1000M Ethernet
Wi-Fi	Simultaneous Dual-Band (2.4 GHz / 5 GHz) Wi-Fi 5, 2x2 MIMO Wi-Fi WAN[1] and/or AP
Serial	RS-232 / RS-485
I/O	GPIO Ignition sensing

PERFORMANCE

Router Throughput	300 Mbps
Recommended Users	1–60
Certifications	FCC, CE, RoHS UL 121201 (Class I, Division 2) EN 61373 (shock and vibration resistance) EN 50155 (railway), EN 61000 (EMC)

SPEEDFUSION™

Technologies	Hot Failover[1], Smoothing[1], Bandwidth Bonding[1], SpeedFusion Boost[1]
VPN Peers	2 / 5[1]
VPN Throughput	No encryption: 80 Mbps 256-bit AES: 60 Mbps

POWER

Power Input	AC Adapter: AC Input 100–240 V / DC Output 12 V 4-Pin Micro-Fit Connector: 10–30 V DC Power over Ethernet 802.3at
Power Consumption	5 W typical / 10 W max

PHYSICAL & ENVIRONMENTAL

Dimensions	5.1 x 4.2 x 1.4 inches 129.5 x 107 x 35 mm
Weight	1 pound / 455 grams
Operating Temperature	–40° to 149°F / –40° to 65°C
Humidity	15–95% (non-condensing)

PACKAGE & WARRANTY

Package Content	1x BR1 Mini M2M RedCap 2x LTE/5G Antennas 2x Dual-Band Wi-Fi Antennas 1x GPS Active Antenna 1x 12 V DC, 2 A 4-Pin Power Supply
Warranty	1-Year Limited Warranty

NOTES

[1] Requires a PrimeCare subscription, complimentary for the first year, or the feature pack add-on license (MAX-BR1-MINI-LC-FP).
[2] Data rates are theoretical maximums.
Specifications are subject to change without notice.

ORDERING

Ordering Information

PRODUCT CODE	REGIONS[1]	5G BANDS	LTE BANDS
BR1 Mini RedCap MAX-BR1-MINI-5GRC-P-T-M-PRM Embedded modem: 1x 5G RedCap	**Global[2]**	SA Sub-6 GHz n1, n2, n3, n5, n7, n8, n12, n13, n14, n18, n20, n25, n26, n28, n30, n38, n40, n41, n48, n53, n66, n70, n71, n77, n78, n79	B1, B2, B3, B4, B5, B7, B8, B12, B13, B14, B17, B18, B19, B20, B25, B26, B28, B30, B34, B38, B39, B40, B41, B42, B43, B48, B66, B71, B106
BR1 Mini RedCap MAX-BR1-MINI-5GRC-P-T-PRM Embedded modem: 1x 5G RedCap	**Global[2]**	SA Sub-6 GHz n1, n2, n3, n5, n7, n8, n12, n13, n14, n18, n20, n25, n26, n28, n30, n38, n40, n41, n48, n53, n66, n70, n71, n77, n78, n79	B1, B2, B3, B4, B5, B7, B8, B12, B13, B14, B17, B18, B19, B20, B25, B26, B28, B30, B34, B38, B39, B40, B41, B42, B43, B48, B66, B71, B106
BR1 Mini M2M RedCap MAX-BR1-MINI-M2M-5GRC-P-T-PRM Embedded modem: 1x 5G RedCap	**Global[2]**	SA Sub-6 GHz n1, n2, n3, n5, n7, n8, n12, n13, n14, n18, n20, n25, n26, n28, n30, n38, n40, n41, n48, n53, n66, n70, n71, n77, n78, n79	B1, B2, B3, B4, B5, B7, B8, B12, B13, B14, B17, B18, B19, B20, B25, B26, B28, B30, B34, B38, B39, B40, B41, B42, B43, B48, B66, B71, B106

NOTES
[1] Regions are for reference. Check the band list against your carrier.
[2] US carrier certifications: AT&T, T-Mobile, Verizon, FirstNet.

PRODUCT CODE	FEATURED ADD-ON
PRM-A-1Y / PCP-A-1Y	PrimeCare A / PrimeCare+ A (1-Year)
PRM-A-2Y / PCP-A-2Y	PrimeCare A / PrimeCare+ A (2-Year)
PRM-A-4Y / PCP-A-4Y	PrimeCare A / PrimeCare+ A (4-Year)
MAX-BR1-MINI-LC-FP	Feature pack for BR1 Mini enables Ethernet WAN, Wi-Fi WAN, Hot Failover, Smoothing, Bandwidth Bonding
ACW-634	10 ft DC Power Cable
ACW-643	Vehicle Cigarette to Molex Power Cable
ACW-791	4-Pin Micro-Fit to USB-C Power Cable
ACW-DIN-BR1-MINI	DIN Rail Mount Kit